IQS7211E DATASHEET

Versatile Trackpad touchscreen controller with proximity, touch, trackpad and gesture outputs.

1 Device Overview

The IQS7211E ProxSense® IC is a capacitive touch and proximity trackpad/touchscreen controller implementation. The IQS7211E features best in class sensitivity, signal-to-noise ratio and automatic tuning of electrodes. Low power proximity detection allows extreme low power operation.

1.1 Main Features

- Highly flexible ProxSense® device
- 13 (QFN20) / 11 (WLCSP18) external sensor pad connections
- Self-/Mutual-capacitive sensors configuration for display wake-up
- ULP wake-up on touch:
  - Dedicated Ultra Low Power wake-up touch sensor or
  - Wake-up on screen/trackpad
- Sensor flexibility:
  - Automatic sensor tuning for optimum sensitivity
  - Internal voltage regulator
  - Reference capacitor
  - On-chip noise filtering
  - Detection debounce and hysteresis
  - Wide range of capacitance detection
- Trackpad/Touchscreen:
  - Up to 2 fingers tracking
  - High resolution coordinate outputs
  - Fast response: Coordinate report rate up to 100 Hz
  - Individual sensor touch
  - Integrated touch size output (area and strength) for touch integrity
  - Single finger gesture recognition engine
  - Electrode mapping for optimal PCB layout
  - Configurable coordinate resolution and orientation
  - Compatible with wide range of overlay materials and thicknesses
  - Compatible with multiple 1-and 2-layer sensor patterns
  - Adjustable sensing frequency offset for limiting potential display interference
  - No calibration required - systems automatically compensated for mechanical and temperature changes
  - Water immunity features
- Design and manufacturing support:
  - Touch pattern layout drawing
  - Full FPC layout package (example & customised)
  - Test guide for touch pattern
  - RFI immunity design support
- Design simplicity:
  - PC Software for debugging and obtaining optimal performance
  - One-time settings programming (during MP) or pre-programmed devices
  - Auto-run from programmed settings for simplified integration
  - No production line calibration required

QFN20

WLCSP18

Copyright © Azoteq 2026
All Rights Reserved

- Display cover lens thickness:
  - Minimum thickness: 0.5 mm
  - Maximum thickness: 2-4 mm depending on design parameters
- Minimise display noise:
  - Advanced DSP for touch performance
  - Display and charger interference avoidance
  - Auto adjusting digital filters
- Supports different display touch panel types:
  - On-cell
  - Add-on touch panel
- Supporting up to 2.5" panels
- Screen resolution:
  - 256 per channel
  - Example: 2048 x 768 (9 x 4 channels), 1536 x 1280 (7 x 6 channels)
- Automated system power modes for optimal response vs consumption
- I^2C communication interface with IRQ/RDY(up to fast plus -1 MHz)
- Event and streaming modes
- Customisable user interface due to programmable memory
- Supply voltage:
  - 1.8 V (-5%) to 3.5 V @ 14 MHz
  - Minimum 2.2 V @ 18 MHz
- Small packages:
  - WLCSP18 (1.62 x 1.62 x 0.5 mm) - interleaved 0.4 mm x 0.6 mm ball pitch
  - QFN20 (3 x 3 x 0.5 mm) - 0.4 mm pitch

1.2 Applications

- Fitness bands
- True Wireless Stereo (TWS) earbuds
- Game controller touch pads
- Headphones

1.3 Block Diagram

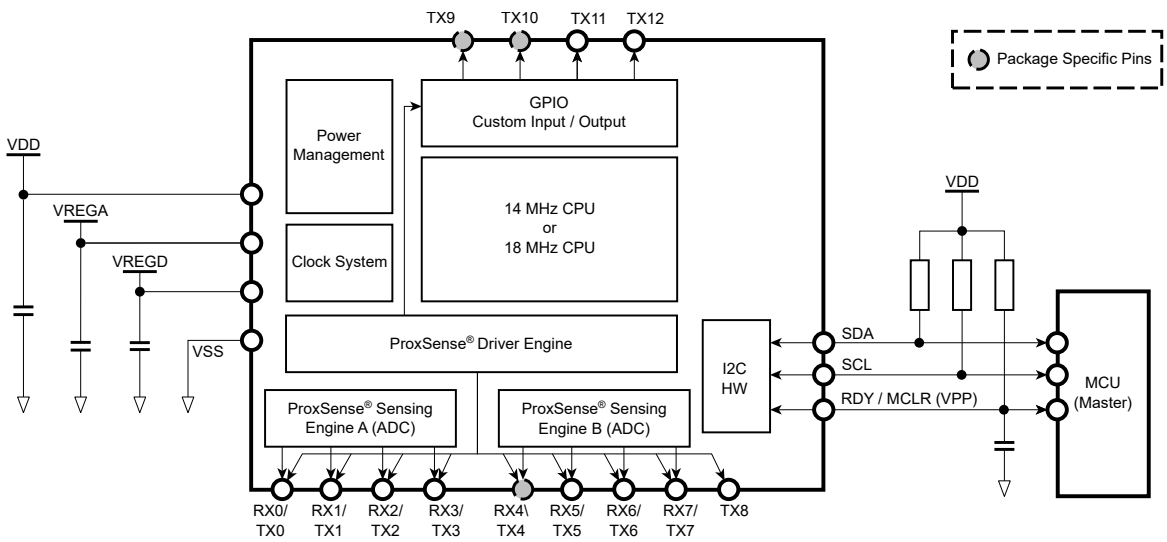

Figure 1.3: Functional Block Diagram[i]

[i] WLCSP18 packages do not have a RX4/TX4 and combines TX9 and TX10

Copyright © Azoteq 2026
All Rights Reserved

1.4 Option Summary

Table 1.1: Maximum Sensor Configurations - QFN20

	Trackpad square	**Trackpad rectangle**
Trackpad option	6x6	8x5

Table 1.2: Maximum Sensor Combinations - WLCSP18

	Trackpad square	**Trackpad rectangle**
Trackpad option	5x5	7x4

Table 1.3: Trackpad Configurations with Different Sensor Combinations[ii]

Total Sensors	Total Rxs	Total Txs	Channels (max 42)	Timeslots (max 21)	Possible?
13	1	12	12	12	✓
	2	11	22	11	✓
	3	10	30	20	✓
	4	9	36	18	✓
	5	8	40	24	✗
	6	7	42	21	✓
	7	6	42	24	✗
	8	5	40	20	✓
12	1	11	11	11	✓
	2	10	20	10	✓
	3	9	27	18	✓
	4	8	32	16	✓
	5	7	35	21	✓
	6	6	36	18	✓
	7	5	35	20	✓
	8	4	32	16	✓
11	1	10	10	10	✓
	2	9	18	9	✓
	3	8	24	16	✓
	4	7	28	14	✓
	5	6	30	18	✓
	6	5	30	15	✓
	7	4	28	16	✓
	8	3	24	12	✓

Copyright © Azoteq 2026
All Rights Reserved

Total Sensors	Total Rxs	Total Txs	Channels	Timeslots	Possible?
10	1	9	9	9	✓
	2	8	16	8	✓
	3	7	21	14	✓
	4	6	24	12	✓
	5	5	25	15	✓
	6	4	24	12	✓
	7	3	21	12	✓
	8	2	16	8	✓

[ii] Sensor combinations with less sensors are possible. WLCSP18 package has a maximum of 11 sensors.

Copyright © Azoteq 2026
All Rights Reserved

Contents

1 Device Overview **1**
1.1 Main Features . . . 1
1.2 Applications . . . 2
1.3 Block Diagram . . . 2
1.4 Option Summary . . . 3

2 Hardware Connection **9**
2.1 WLCSP18 Pin Diagrams . . . 9
2.2 QFN20 Pin Diagram . . . 9
2.3 Pin Attributes . . . 10
2.4 Signal Descriptions . . . 11
2.5 Reference Schematic . . . 12

3 Electrical Characteristics **13**
3.1 Absolute Maximum Ratings . . . 13
3.2 Recommended Operating Conditions . . . 13
3.3 ESD Rating . . . 14
3.4 Current Consumption . . . 15

4 Timing and Switching Characteristics **16**
4.1 Reset Levels . . . 16
4.2 MCLR Pin Levels and Characteristics . . . 16
4.3 Miscellaneous Timings . . . 16
4.4 Digital I/O Characteristics . . . 17
4.5 I^2C Characteristics . . . 17

5 ProxSense® Module **19**
5.1 Trackpad Channels . . . 19
5.1.1 Channel Numbers . . . 19
5.2 Alternate Low-Power Channel (ALP) . . . 19
5.3 Count Value . . . 19
5.3.1 Trackpad Count Values . . . 20
5.3.2 ALP Count Values . . . 20
5.3.3 Max Count . . . 20
5.3.4 Trackpad Delta Value . . . 20
5.4 Reference Value/Long-Term Average (LTA) . . . 20
5.4.1 Trackpad References . . . 20
5.4.2 ALP Long-Term Average . . . 20
5.4.3 Reseed . . . 21
5.5 Channel Outputs . . . 21
5.5.1 Trackpad Touch Output . . . 21
5.5.2 ALP Output . . . 21
5.5.3 Output Debounce . . . 21
5.6 Automatic Tuning Implementation (ATI) . . . 21
5.6.1 ATI Coarse Divider/ Multiplier . . . 22
5.6.2 ATI Fine Divider . . . 22
5.6.3 ATI Compensation (and ATI Target) . . . 22
5.6.4 ATI Divider . . . 22
5.7 Automatic Re-ATI . . . 22
5.7.1 Description . . . 22

Copyright © Azoteq 2026
All Rights Reserved

5.7.2 Conditions for Re-ATI to activate . . . 23
5.7.3 ATI Error . . . 23

6 Sensing Modes 24
6.1 Report Rate . . . 24
6.2 Mode Timeout . . . 25
6.3 Manual Control . . . 25

7 Trackpad 26
7.1 Configuration . . . 26
7.1.1 Size Selection . . . 26
7.1.2 Cycle Setup . . . 26
7.1.3 Trackpad Channel and Cycle Limitations . . . 26
7.1.4 Individual Channel Disabling . . . 26
7.1.5 Rx/Tx Mapping . . . 26
7.2 Trackpad Outputs . . . 27
7.2.1 Number of Fingers . . . 27
7.2.2 Relative XY . . . 27
7.2.3 Absolute XY . . . 27
7.2.4 Touch Strength . . . 27
7.2.5 Area . . . 27
7.2.6 Tracking Identification . . . 27
7.3 Maximum Number of Multi-touches . . . 27
7.4 XY Resolution . . . 27
7.5 Stationary Touch . . . 27
7.6 Multi-touch Finger Split . . . 28
7.7 XY Output Flip & Switch . . . 28
7.8 XY Position Filtering . . . 28
7.8.1 MAV Filter . . . 28
7.8.2 IIR Filter . . . 28
7.9 X & Y Trim . . . 29

8 Gestures 30
8.1 Single, Double and Triple Tap Gesture . . . 30
8.2 Press-and-Hold Gesture . . . 34
8.3 Swipe Gesture . . . 35
8.3.1 Single Swipe . . . 35
8.3.2 Swipe-and-Hold . . . 36
8.3.3 Consecutive Swipe . . . 37
8.4 Palm Gesture (Flat Hand Gesture) . . . 38

9 Hardware Settings 39
9.1 Main Oscillator . . . 39
9.2 Charge Transfer Frequency . . . 39
9.3 Reset . . . 40
9.3.1 Reset Indication . . . 40
9.3.2 Software Reset . . . 40
9.3.3 Hardware Reset . . . 40

10 Additional Features 41
10.1 GUI for Parameter Setup . . . 41
10.1.1 Automated Start-up . . . 41

Copyright © Azoteq 2026
All Rights Reserved

10.1.2 Manual Start-up . . . 41
10.2 Suspend . . . 41
10.3 Watchdog Timer (WDT) . . . 41
10.4 RF Immunity . . . 42
10.5 Additional Non-Trackpad Channels . . . 42
10.6 Version Information . . . 42

11 I²C Interface 43
11.1 I²C Module Specification . . . 43
11.2 I²C Address . . . 43
11.3 I³C Compatibility . . . 43
11.4 Memory Map Addressing . . . 43
11.4.1 8-bit Address . . . 43
11.4.2 Extended 16-bit Address . . . 43
11.5 Data . . . 44
11.6 I²C Timeout . . . 44
11.7 Terminate Communication . . . 44
11.8 RDY/IRQ . . . 45
11.9 Event Mode Communication . . . 45
11.9.1 Events . . . 45
11.9.2 Force Communication/Polling . . . 46
11.9.3 Force Communication Clock Stretching Issue . . . 46
11.10 Invalid Communications Return . . . 47

12 I²C Memory Map - Register Descriptions 48

13 Implementation and Layout 52
13.1 Layout Fundamentals . . . 52
13.1.1 Power Supply Decoupling . . . 52
13.1.2 VREG Capacitors . . . 52
13.1.3 WLCSP Light Sensitivity . . . 53

14 Ordering Information 54
14.1 Ordering Code . . . 54
14.2 Top Marking . . . 54
14.2.1 WLCSP18 Package . . . 54
14.2.2 QFN20 Package Marking Option 1 . . . 54
14.2.3 QFN20 Package Marking Option 2 . . . 55

15 Package Specification 56
15.1 Package Outline Description – QFN20 (QFR) . . . 56
15.2 Recommended PCB Footprint – QFN20 (QFR) . . . 57
15.3 Package Outline Description – QFN20 (QNR) . . . 58
15.4 Recommended PCB Footprint – QFN20 (QNR) . . . 59
15.5 Package Outline Description – WLCSP18 . . . 60
15.6 Recommended PCB Footprint – WLCSP18 . . . 61
15.7 Tape and Reel Specifications . . . 62
15.8 Moisture Sensitivity Levels . . . 64
15.9 Reflow Specifications . . . 64

A Memory Map Descriptions 65

Copyright © Azoteq 2026
All Rights Reserved

B Revision History 73

2 Hardware Connection

2.1 WLCSP18 Pin Diagrams

Table 2.1: 18-pin WLCSP18 Package

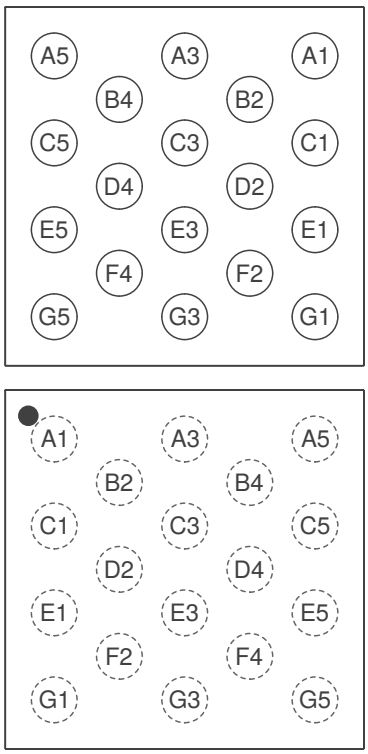

Pin no.	Signal
A1	TX9/TX10[i]
A3	SCL
A5	RDY/MCLR (VPP)
B2	TX11
B4	SDA
C1	TX8
C3	TX12
C5	VDD
D2	RX2/TX2
D4	VSS
E1	RX6/TX6
E3	RX1/TX1
E5	VREGD
F2	RX5/TX5
F4	RX0/TX0
G1	RX7/TX7
G3	RX3/TX3
G5	VREGA

2.2 QFN20 Pin Diagram

Table 2.2: 20-pin QFN Package (Top View)

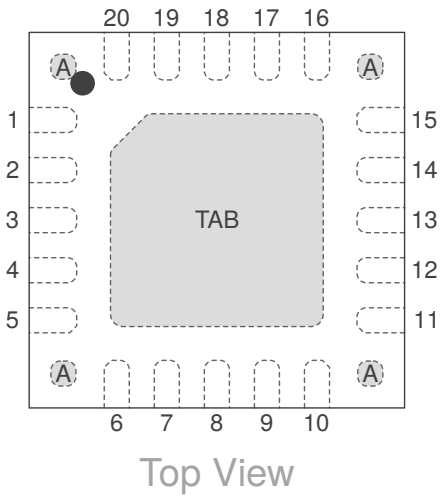

Pin no.	Signal name	Pin no.	Signal name
1	VDD	11	RX6/TX6
2	VREGD	12	RX7/TX7
3	VSS	13	TX8
4	VREGA	14	TX9
5	RX0/TX0	15	TX10
6	RX1/TX1	16	TX11
7	RX2/TX2	17	TX12
8	RX3/TX3	18	SCL
9	RX4/TX4	19	SDA
10	RX5/TX5	20	RDY/MCLR (VPP)

Area name	Signal name
TAB[ii]	Thermal pad (floating)
A[iii]	Thermal pad (floating)

[i] Please note that TX9 and TX10 are connected together in the WLCSP18 package.
[ii] It is recommended to connect the thermal pad (TAB) to VSS.

Copyright © Azoteq 2026
All Rights Reserved

2.3 Pin Attributes

Table 2.3: Pin Attributes

Pin no.		Signal name	Signal type	Buffer type	Power source
WLCSP18	QFN20				
C5	1	VDD	Power	Power	N/A
E5	2	VREGD	Power	Power	N/A
D4	3	VSS	Power	Power	N/A
G5	4	VREGA	Power	Power	N/A
F4	5	RX0/TX0	Analog		VREGA
E3	6	RX1/TX1	Analog		VREGA
D2	7	RX2/TX2	Analog		VREGA
G3	8	RX3/TX3	Analog		VREGA
-	9	RX4/TX4	Analog		VREGA
F2	10	RX5/TX5	Analog		VREGA
E1	11	RX6/TX6	Analog		VREGA
G1	12	RX7/TX7	Analog		VREGA
C1	13	TX8	Analog		VREGA
A1	14	TX9	Prox/Digital		VREGA/VDD
B4	19	SDA	Digital		VDD
A3	18	SCL	Digital		VDD
A1	15	TX10	Prox/Digital		VREGA/VDD
B2	16	TX11	Prox/Digital		VREGA/VDD
C3	17	TX12	Prox/Digital		VREGA/VDD
A5	20	RDY/MCLR (VPP)	Digital		VDD

[iii] Electrically connected to TAB. These exposed pads are only present on *–QNR* order codes.

Copyright © Azoteq 2026
All Rights Reserved

2.4 Signal Descriptions

Table 2.4: Signal Descriptions

Function	Signal name	Pin no.		Pin type[iv]	Description
		WLCSP18	QFN20		
ProxFusion®	RX0/TX0	F4	5	IO	ProxFusion® channel
	RX1/TX1	E3	6	IO	
	RX2/TX2	D2	7	IO	
	RX3/TX3	G3	8	IO	
	RX4/TX4	-	9	IO	
	RX5/TX5	F2	10	IO	
	RX6/TX6	E1	11	IO	
	RX7/TX7	G1	12	IO	
	TX8	C1	13	O	TX8 pad
	TX9	A1	14	IO	TX9 pad
	TX10	A1	15	IO	TX10 pad
	TX11	B2	16	IO	TX11 pad
	TX12	C3	17	IO	TX12 pad
GPIO	RDY/MCLR (VPP)	A5	20	IO	RDY pad VPP input for OTP
I^2C	SDA	B4	19	IO	I^2C data
	SCL	A3	18	IO	I^2C clock
Power	VDD	C5	1	P	Power supply input voltage
	VREGD	E5	2	P	Internal regulated supply output for digital domain
	VSS	D4	3	P	Analog/digital ground
	VREGA	G5	4	P	Internal regulated supply output for analog domain

[iv] Pin Types: I = Input, O = Output, IO = Input or Output, P = Power.

Copyright © Azoteq 2026
All Rights Reserved

2.5 Reference Schematic

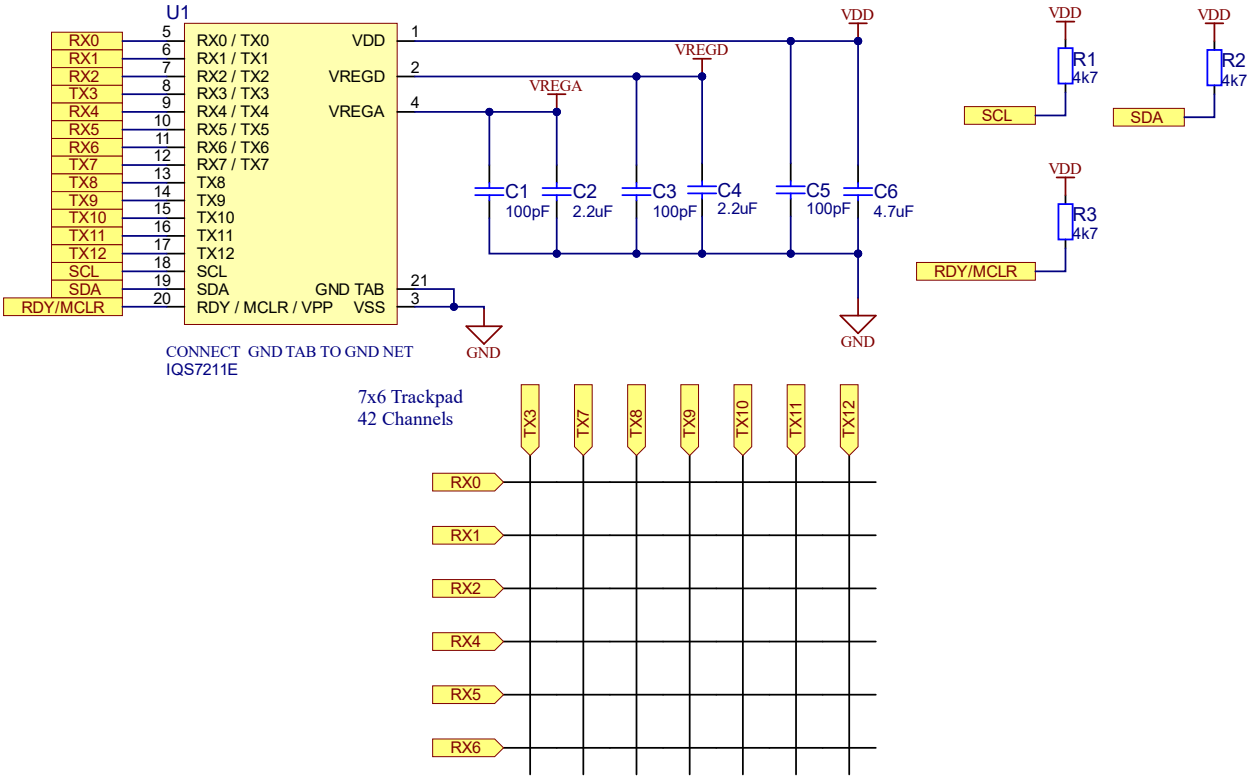

Figure 2.1: Reference Trackpad Schematic: 7x6 Pattern

3 Electrical Characteristics

3.1 Absolute Maximum Ratings

Table 3.1: Absolute Maximum Ratings

	Min	Max	Unit
Voltage applied at VDD pin to VSS	1.71	3.6	V
Voltage applied to any ProxFusion® pin (referenced to VSS)	−0.3	VREGA	V
Voltage applied to any other pin (referenced to VSS)	−0.3	VDD + 0.3 (3.6 V max)	V
Storage temperature, T_{stg}	−40	85	°C

3.2 Recommended Operating Conditions

Table 3.2: Recommended Operating Conditions

		Min	Nom	Max	Unit
VDD	Supply voltage applied at VDD pin: f_{OSC} = 14 MHz f_{OSC} = 18 MHz	 1.71 2.2		 3.6 3.6	V
VREGA	Internal regulated supply output for analog domain: f_{OSC} = 14 MHz f_{OSC} = 18 MHz	 1.49 1.7	 1.53 1.75	 1.57 1.79	V
VREGD	Internal regulated supply output for digital domain: f_{OSC} = 14 MHz f_{OSC} = 18 MHz	 1.56 1.75	 1.59 1.8	 1.64 1.85	V
VSS	Supply voltage applied at VSS pin		0		V
T_A	Operating free-air temperature	−40	25	85	°C
C_{VDD}	Recommended capacitor at VDD	$2\times C_{VREGA}$	$3\times C_{VREGA}$		µF
C_{VREGA}	Recommended external buffer capacitor at VREGA, ESR $\leq$ 200 mΩ	2[i]	4.7	10	µF
C_{VREGD}	Recommended external buffer capacitor at VREGD, ESR $\leq$ 200 mΩ	2[i]	4.7	10	µF
$Cx_{SELF-VSS}$	Maximum capacitance between ground and all external electrodes on all ProxFusion® blocks (self-capacitance mode)	1		400[ii]	pF
$Cm_{CTx-CRx}$	Capacitance between receiving and transmitting electrodes on all ProxFusion® blocks (mutual-capacitance mode)	0.2		9[ii]	pF
$Cp_{CRx-VSS}$	Maximum capacitance between ground and all external electrodes on all ProxFusion® blocks (mutual-capacitance mode at f_{xfer} = 1 MHz)			100[ii]	pF
$\frac{Cp_{CRx-VSS}}{Cm_{CTx-CRx}}$	Capacitance ratio for optimal SNR in mutual-capacitance mode[iii]	10		20	n/a
$RCx_{CRx/CTx}$	Series (in-line) resistance of all mutual-capacitance pins (Tx & Rx pins) in mutual-capacitance mode	0[iv]	0.47	10[v]	kΩ
RCx_{SELF}	Series (in-line) resistance of all self-capacitance pins in self-capacitance mode	0[iv]	0.47	10[v]	kΩ

Copyright © Azoteq 2026
All Rights Reserved

3.3 ESD Rating

Table 3.3: ESD Rating

		Value	Unit
$V_{(ESD)}$ Electrostatic discharge	Human-body model (HBM), per ANSI/ESDA/JEDEC JS-001[vi]	±4000	V

[i] Absolute minimum allowed capacitance value is 1 µF, after taking derating, temperature, and worst-case tolerance into account. Please refer to AZD004 for more information regarding capacitor derating.
[ii] RCx = 0 Ω.
[iii] Please note that the maximum values for Cp and Cm are subject to this ratio.
[iv] Nominal series resistance of 470 Ω is recommended to prevent received and emitted EMI effects. Typical resistance also adds additional ESD protection.
[v] Series resistance limit is a function of f_{xfer} and the circuit time constant, RC. $R_{max} \times C_{max} = \frac{1}{(6 \times f_{xfer})}$ where C is the pin capacitance to VSS.
[vi] JEDEC document JEP155 states that 500-V HBM allows safe manufacturing with a standard ESD control process. Pins listed as ±4000 V may actually have higher performance.

Copyright © Azoteq 2026
All Rights Reserved

3.4 Current Consumption

The current consumption of the IQS7211E is highly dependent on the specific parameters configured during initialisation. Therefore, the table provided below serves as an illustration of the expected power consumption for similar configurations[vii]. All measurements are taken without I²C communication, since the amount of data read via I²C will impact the current consumption and sampling period of the device. The device configurations outlined in the table represent practical setups commonly encountered in various applications. The main oscillator frequency was set to *14 MHz* for all measurements.

Table 3.4: Current Consumption

Power mode	Active channels	Report rate [ms]	Auto-prox cycles	Setup	Current [µA]
Active Mode	Trackpad (42 Channel)	10	N/A	Configured as a 7x6 trackpad ATI Target of 200 counts 1.4 MHz conversion frequency 1 finger touch (8 mm diameter) active No I²C comms	1500
Active Mode	Trackpad (42 Channel)	16	N/A	Configured as a 7x6 trackpad ATI Target of 200 counts 1.4 MHz conversion frequency 1 finger touch (8 mm diameter) active No I²C comms	985
Idle Mode	Trackpad (42 Channel)	50	N/A	Same as above but no touch, and no I²C	309
Low Power 1	Wake-up on Trackpad	100	None	ALP configured with ATI Target of 200 counts 6 Rxs and 4 Txs active 1.4 MHz conversion frequency No user interaction / No comms (event mode)	11
Low Power 1	Wake-up on Trackpad	100	32	ALP configured with ATI Target of 200 counts 6 Rxs and 4 Txs active 1.4 MHz conversion frequency No user interaction / No comms (event mode)	9
Low Power 2	Wake-up on Trackpad	200	None	ALP configured with ATI Target of 200 counts 6 Rxs and 4 Txs active 1.4 MHz conversion frequency No user interaction / No comms (event mode)	7
Low Power 2	Wake-up on Trackpad	200	32	ALP configured with ATI Target of 200 counts 6 Rxs and 4 Txs active 1.4 MHz conversion frequency No user interaction / No comms (event mode)	5

[vii] These measurements are based on bench testing and have not been characterised over large volumes.

Copyright © Azoteq 2026
All Rights Reserved

4 Timing and Switching Characteristics

4.1 Reset Levels

Table 4.1: Reset Levels

Parameter		Min	Max	Unit
V_{VDD}	Power-up (Reset trigger) – slope > 100 V/s		1.65	V
	Power-down (Reset trigger) – slope < –100 V/s	0.9		

4.2 MCLR Pin Levels and Characteristics

Table 4.2: MCLR Pin Characteristics

Parameter		Conditions	Min	Typ	Max	Unit
$V_{IL(MCLR)}$	MCLR Input low level voltage	VDD = 3.3 V	VSS – 0.3	-	1.05	V
		VDD = 1.7 V			0.75	
$V_{IH(MCLR)}$	MCLR Input high level voltage	VDD = 3.3 V	2.25	-	VDD + 0.3	V
		VDD = 1.7 V	1.05			
$R_{PU(MCLR)}$	MCLR pull-up equivalent resistor		180	210	240	kΩ
$t_{PULSE(MCLR)}$	MCLR input pulse width – no trigger	VDD = 3.3 V	-	-	15	ns
		VDD = 1.7 V			10	
$t_{TRIG(MCLR)}$	MCLR input pulse width – ensure trigger		250	-	-	ns

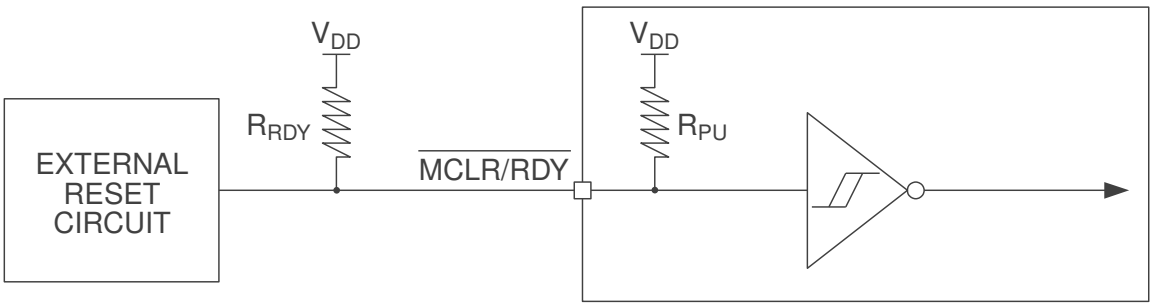

Figure 4.1: MCLR Pin Diagram

4.3 Miscellaneous Timings

Table 4.3: Miscellaneous Timings

Parameter		Min	Typ	Max	Unit
f_{OSC}	Master CLK frequency tolerance 14 MHz	13.23	14	14.77	MHz
f_{OSC}	Master CLK frequency tolerance 18 MHz	17.1	18	19.54	MHz
f_{xfer}	Charge transfer frequency (derived from f_{OSC})	70	500 – 1500	9000	kHz

Copyright © Azoteq 2026
All Rights Reserved

4.4 Digital I/O Characteristics

Table 4.4: Digital I/O Characteristics

Parameter		Test Conditions[i]	Min	Max	Unit
V_{OL}	Output low voltage of SDA and SCL pins	I_{OL} = 20 mA $V_{DD} > 2$ V		0.4	V
		I_{OL} = 20 mA $V_{DD} \leq 2$ V		0.2 V_{DD}	
	Output low voltage of SDA and SCL pins in GPIO output mode	I_{OL} = 10 mA		0.1 V_{DD}	
	Output low voltage of RDY/MCLR (VPP)	I_{OL} = 5 mA			
	Output low voltage of any other GPIO pin	I_{OL} = 10 mA			
V_{OH}	Output high voltage	I_{OH} = −5 mA	0.9 V_{DD}		V
V_{IL}	Input low voltage		V_{SS} − 0.3	0.3 V_{DD}	V
V_{IH}	Input high voltage		0.7 V_{DD}	V_{DD} + 0.3	V
C_b	SDA and SCL bus capacitance			550	pF

[i] Standard operating conditions:
V_{DD}: 1.8 V to 3.6 V, unless otherwise stated.
Operating temperature: −20 °C to 80 °C.

4.5 I²C Characteristics

Table 4.5: I²C Characteristics

Parameter		Min	Max	Unit
f_{SCL}	SCL clock frequency		1000	kHz
$t_{HD,STA}$	Hold time (repeated) START condition	0.26		µs
t_{LOW}	LOW period of the SCL clock	0.5		µs
t_{HIGH}	HIGH period of the SCL clock	0.26		µs
$t_{SU,STA}$	Setup time for a repeated START	0.26		µs
$t_{HD,DAT}$	Data hold time	0		ns
$t_{SU,DAT}$	Data setup time	50		ns
$t_{SU,STO}$	Setup time for STOP	0.26		µs
t_{BUF}	Bus free time between a STOP and START condition	0.5		µs
t_{SP}	Pulse duration of spikes suppressed by input filter	0	50	ns

Copyright © Azoteq 2026
All Rights Reserved

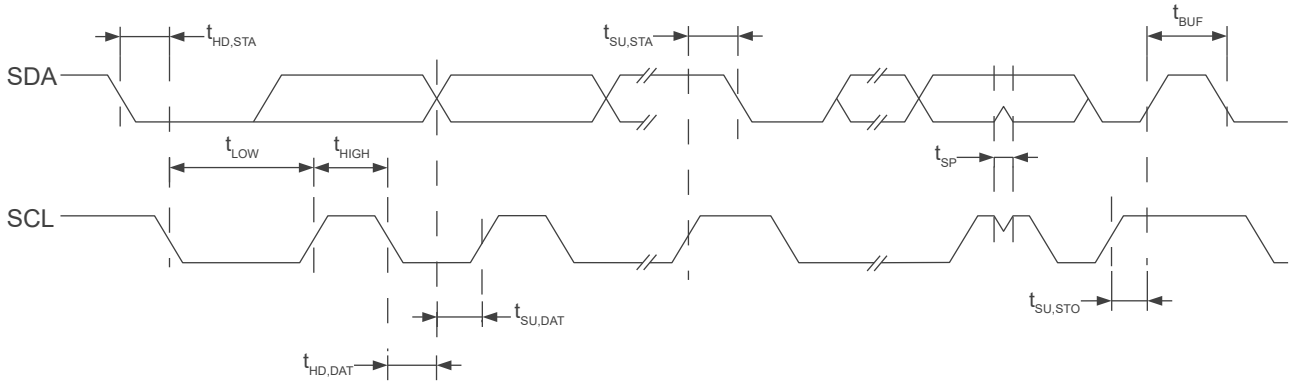

Figure 4.2: I²C Mode Timing Diagram

5 ProxSense® Module

The IQS7211E contains a ProxSense® module that uses patented technology to measure and process the capacitive sensor data. The channel touch output is the primary output from the sensors. These are processed further to provide secondary trackpad outputs that include finger position, finger size as well as on-chip gesture recognition.

5.1 Trackpad Channels

On a trackpad sensor (typically a diamond shape pattern), each intersection of an Rx and Tx row/column forms a mutual-capacitive sensing element which is referred to as a *channel*. Each channel has an associated count value, reference value and touch status.

5.1.1 Channel Numbers

Trackpad channels are numbered from 0 to (*TotalRxs* $*$ *TotalTxs*) - 1. They are assigned from the top-left corner, first along the Rxs before stepping to the next Tx. The channel number must be known for some settings such as allocating channels into *sensing cycles* (timeslots). Here is an example of a 4x3 trackpads′ channel numbers:

Table 5.1: Channel Number Assignment

	Rx0 (Column 0)	Rx4 (Column 1)	Rx1 (Column 2)	Rx5 (Column 3)
Tx8 (Row 0)	0	1	2	3
Tx10 (Row 1)	4	5	6	7
Tx2 (Row 2)	8	9	10	11

5.2 Alternate Low-Power Channel (ALP)

To provide lower power consumption, the trackpad can be configured as a single sensor in LP1 and LP2, instead of sensing the individual trackpad channels. This channel has a lot of setup flexibility:

- *Sensing method:* mutual capacitive or self-capacitive (*Sensing Method*).
- *Multiple electrode selection:* which Rxs (*Rx EN*) / Txs (*TX EN*[i]) are active during conversions.
- *Auto-prox:* autonomous sensing cycles while core is asleep (*LPX Auto-Prox Cycles*) giving further power saving, but similar wake-up capability.
- *Count value filtering (Count Filter):* gives reliable proximity detection in noisy environments.
- *Single channel:* since the alternate channel is processed as only a single channel, much less processing is done, allowing for lower overall power consumption.

5.3 Count Value

The capacitive sensing measurement returns a *count value* for each channel. Count values are inversely proportional to capacitance, and all outputs are derived from this.

[i] On the CSP package, Tx9 and Tx10 are shared on the same pin. In this case if Tx9/Tx10 are used for the ALP, special care must be taken. Use the same NUMBER for the ALP Tx that was used when configuring the TP Txs. For example if Tx9 was using in the mapping for the trackpad, and you must also use Tx9 on the ALP. Keep the same number consistently, either Tx9 and Tx9, or Tx10 and Tx10.

Copyright © Azoteq 2026
All Rights Reserved

5.3.1 Trackpad Count Values

The individual trackpad channel count values (*Count Values*) are unfiltered.

5.3.2 ALP Count Values

If Rxs from both prox engine A and B are enabled, there will be two count measurements (*ALP Count A/B*). To reduce processing time (and thus decrease current consumption) the measurements are added together (*ALP channel count*) and processed as a single channel. A count value filter is implemented on this channel to give stable proximity output for system wake-up from low-power mode. It is recommended to leave this count filter enabled (*Count Filter*) The amount of filtering can be modified (*ALP count filter beta*) if required. This beta is used as follows to determine the damping factor of the filter:

$$\text{Count damping factor} = (8 * \text{Beta} - 7) / 2048$$

If the beta is small, the filtering is stronger (filtered count follows raw count slower), and if the beta is larger, the filtering is weaker (filtered count follows raw count faster).

5.3.3 Max Count

Each channel is limited to having a count value smaller than the configurable limit (*Max Count*). If the ATI setting or hardware causes measured count values higher than this, the conversion will be stopped, and the max value will be read for that relevant count value.

5.3.4 Trackpad Delta Value

The signed delta values (*Trackpad delta values*) are simply:

$$\text{Delta} = \text{Count} - \text{Reference}$$

5.4 Reference Value/Long-Term Average (LTA)

User interaction is detected by comparing the measured count values to some reference value. The reference value/LTA of a sensor is slowly updated to track changes in the environment and is not updated during user interaction.

5.4.1 Trackpad References

The trackpad *reference values* are a snapshot (identical to a reseed) of the count value, stored during a time of no user activity, and thus is a non-affected reference. The trackpad reference values are only updated from LP1 and LP2 mode when modes are managed automatically, where no user interaction is assumed. Thus, if the system is controlled manually, the reference must also be managed and updated manually by the host.

The reference value is updated or refreshed according to a configurable interval (*Reference update time*), in seconds. The Reference update time has a maximum setting of *60 seconds*.

5.4.2 ALP Long-Term Average

The ALP channel does not have a snapshot reference value as used on the trackpad but utilises a filtered long-term average value (*ALP channel LTA*). The LTA tracks the environment closely for accurate comparisons to the measured count value, to allow for small proximity deviations to be sensed.

Copyright © Azoteq 2026
All Rights Reserved

The speed of LTA tracking can be adjusted with the *ALP LTA beta*. There is a beta for LP1 and LP2. This is to allow different settings for different report rates, so that the speed of LTA tracking can remain the same. These beta settings are used in the same way as for the counts, see Section 5.3.2.

5.4.3 Reseed

Since the *Reference* (or *LTA* for ALP channel) is critical for the device to operate correctly, there could be known events or situations which would call for a manual reseed. A reseed takes the latest measured counts, and seeds the *reference/LTA* with this value, therefore updating the value to the latest environment. A reseed command can be given by setting the corresponding bit (*TP Reseed* or *ALP Reseed*.

5.5 Channel Outputs

5.5.1 Trackpad Touch Output

The trackpad touch output (*Touch status*) is set when a channel's count value increases by more than the selected threshold.

The touch threshold for a specific channel is calculated as follows:

$$\text{Threshold} = \text{Reference} \times (1 + \textit{Multiplier} / \mathbf{128})$$

where *Multiplier* is an 8-bit unsigned value for both the 'set' and 'clear' threshold, allowing a hysteresis to provide improved touch detection. A smaller fraction will thus be a more sensitive threshold.

5.5.2 ALP Output

This output (*ALP Output*) is set when a channel's count value deviates from the LTA value by more than the selected threshold - thus a delta setting (*ALP threshold*). This can be used to implement a proximity or touch detection, depending on the threshold used.

5.5.3 Output Debounce

There is no debounce on the trackpad touch detection (or release). This is because debouncing adds too much delay, and fast movements on the touch panel cannot be debounced fast enough to provide reliable XY output data.

Debounce on the ALP output is however done, to allow for stable proximity detection if needed. An 8-bit unsigned value is used for the set and clear debounce parameter (*ALP set/clear debounce*).

5.6 Automatic Tuning Implementation (ATI)

The ATI is a sophisticated technology implemented in the new ProxSense® devices to allow optimal performance of the devices for a wide range of sensing electrode capacitances, without modification to external components. The ATI settings allow tuning of various parameters.

The main advantage of the ATI is to balance out small variations between trackpad hardware and IQS7211E variation, to give similar performance across devices and temperature.

For a detailed description of ATI, please contact Azoteq.

Copyright © Azoteq 2026
All Rights Reserved

5.6.1 ATI Coarse Divider/ Multiplier

The *ATI coarse divider / multiplier* can be used to configure the base value for the trackpad and ALP channels. There is one global setting parameter for all the active trackpad channels for the course divider and one for the course multiplier. The divider is a 5-bit setting (0-31) and the multiplier a 4-bit setting (0-15).

5.6.2 ATI Fine Divider

The *ATI fine divider* is also used to configure the trackpad and ALP base value. There is one global setting parameter for all the active trackpad channels for the fine divider. The divider is a 5-bit setting (0-31).

5.6.3 ATI Compensation (and ATI Target)

The ATI Compensation value for each channel (*ATI compensation*) and (*ALP ATI compensation*) is set by the ATI procedure, and are chosen so that each count value is close to the selected target value (*TP ATI target* / *ALP ATI target*). The algorithm is queued using *TP / ALP Re-ATI*.

The *TP / ALP Re-ATI* bits clear automatically on chip when the algorithm has completed.

The queued re-ATI routine will execute as soon as the corresponding channels are sensed. For example, the trackpad re-ATI when the system is in Active, Idle-Touch or Idle mode, and the ALP re-ATI when the system is in LP1 or LP2.

The ALP channel has individual compensation values (*ALP ATI compensation*) for both proximity engines A (Rx0-3) and B (Rx4-7).

The ALP ATI target value applies to each of the individual count values configured for the ALP channel. The combined channel will thus have a count near the sum of the ATI target.

This routine will only execute after the communication window is terminated, and the I^2C communication will only resume once the ATI routine has completed.

ATI compensation is 10-bit value, thus 0 to 1023.

5.6.4 ATI Divider

The ATI Compensation can be scaled by means of the *Trackpad ATI compensation divider* / *ALP ATI compensation divider*. Since the 'size' of compensation is scaled, a small divider value will relate to large compensation, meaning the step size of each compensation unit increase will be larger. For smaller more accurate compensation steps, a larger divider is selected, but the 'range' of compensation is then reduced.

5.7 Automatic Re-ATI

5.7.1 Description

When enabled (*TP Re-ATI EN*) or (*ALP Re-ATI EN*) a re-ATI will be triggered if certain conditions are met. One of the most important features of the re-ATI is that it allows easy and fast recovery from an incorrect ATI, such as when performing ATI during user interaction with the sensor. This could cause the wrong ATI Compensation to be configured, since the user affects the capacitance of the sensor. A re-ATI would correct this. It is recommended to always have this enabled. When a re-ATI is performed

Copyright © Azoteq 2026
All Rights Reserved

on the IQS7211E, a status bit will set momentarily to indicate that this has occurred (*TP / ALP ReATI Occurred*).

5.7.2 Conditions for Re-ATI to activate

1. Reference drift

A re-ATI is performed when the reference of a channel drifts outside of the acceptable range around the ATI Target. The boundaries where re-ATI occurs for the trackpad channels and for the ALP channels are independently set via the drift threshold value (*Reference drift limit* / *ALP LTA drift limit*). The re-ATI boundaries are calculated from the delta value as follows:

$$\text{Re-ATI Boundary} = \text{ATI target} \pm \text{Drift limit}$$

For example, assume that the ATI target is configured to 800 and that the reference drift value is set to 50. If re-ATI is enabled, the ATI algorithm will be repeated under the following conditions:

$$\text{Reference} > 850 \text{ or Reference} < 750$$

The ATI algorithm executes in a short time, so goes unnoticed by the user.

2. Decreased Count Value

A considerable decrease in the count value of a trackpad channel is abnormal since user interaction increases the count value. Therefore, if a decrease larger than the configurable threshold (*Trackpad minimum count re-ATI value*) is seen on such a trackpad channel, it is closely monitored. If this is continuously seen for 15 cycles, it will trigger a re-ATI.

5.7.3 ATI Error

After the ATI algorithm is performed, a check is done to see if there was any error with the algorithm. An ATI error is reported if one of the following is true for any channel after the ATI has completed:

- ATI Compensation = 0 (min value)
- ATI Compensation = 1023 (max value)
- Count is already outside the re-ATI range upon completion of the ATI algorithm

If any of these conditions are met, the corresponding error flag will be set (*ATI Error / ALP ATI Error*). The flag status is only updated again when a new ATI algorithm is performed.

Re-ATI will not be repeated immediately if an ATI Error occurs. A configurable time (*Re-ATI retry time*) will pass where the re-ATI is momentarily suppressed. This is to prevent the re-ATI repeating indefinitely. An ATI error should however not occur under normal circumstances. The Re-ATI retry time has a maximum setting of *60 seconds*.

Copyright © Azoteq 2026
All Rights Reserved

6 Sensing Modes

The IQS7211E automatically switches between different charging modes dependent on user interaction and other aspects. This is to allow for fast response, and low power consumption when applicable. The current mode can be read from the device (*Charging Mode*).

The modes are best illustrated by means of the following state diagram.

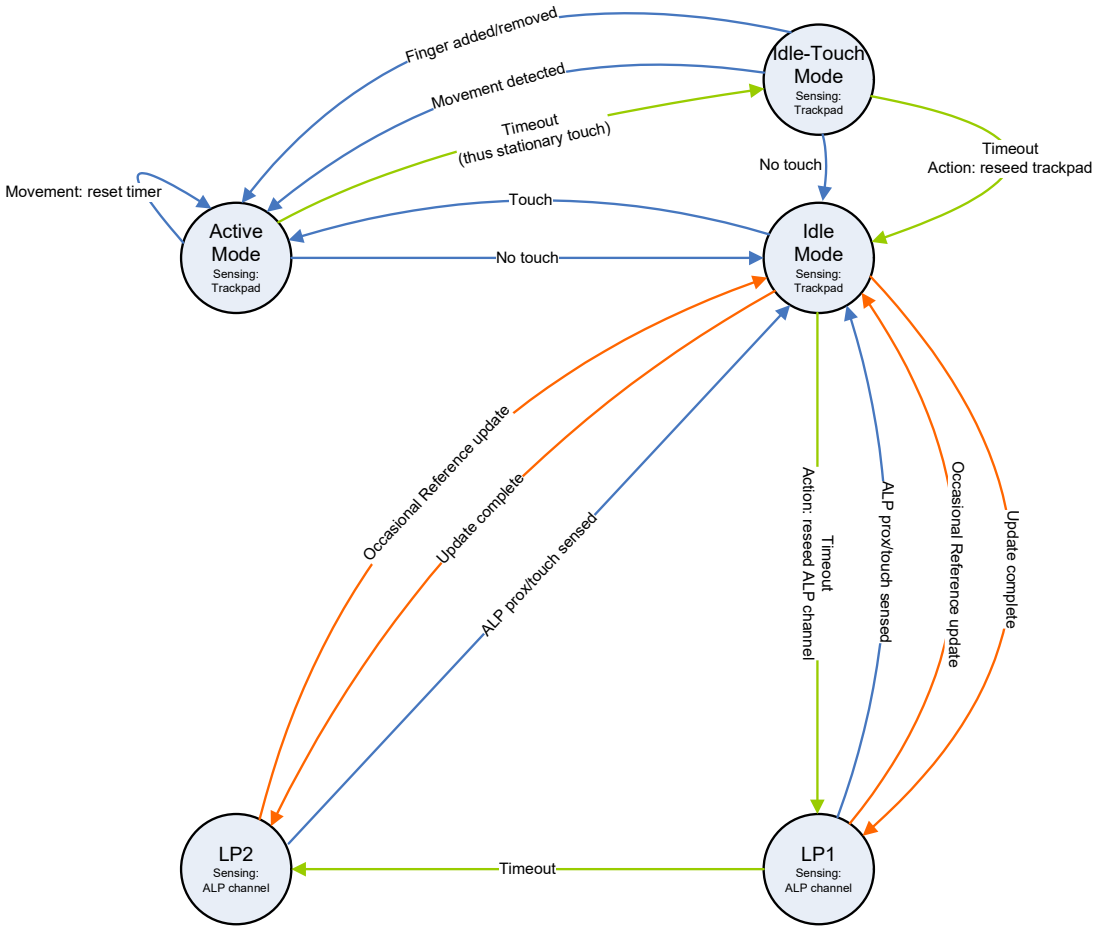

Figure 6.1: System Mode State Diagram

6.1 Report Rate

The report rate for each mode can be adjusted as required by the design. A faster report rate will have a higher current consumption but will give faster response to user interaction. *Active mode* typically has the fastest report rate, and the other modes are configured according to the power budget of the design, and the expected response time.

The report rate is configured by selecting the cycle time (in milliseconds) for each mode:

- *Report rate Active mode*
- *Report rate Idle touch mode*
- *Report rate Idle mode*
- *Report rate LP1 mode*
- *Report rate LP2 mode*

6.2 Mode Timeout

The timeout values can be configured, and once these times have elapsed, the system will change to the next state according to the state diagram. These times are adjusted by selecting a desired value (in seconds), for the specific timeout:

- *Timeout - Active mode*
- *Timeout - Idle touch mode*
- *Timeout - Idle mode*
- *Timeout - LP1 mode*

A timeout value of 0 will result in a 'never' timeout condition.

6.3 Manual Control

The default method (manual control disabled) allows the IQS7211E to automatically switch between modes and update *reference values* as shown in Figure 6.1. This requires no interaction from the master to manage the device, and is the recommended option.

The master can manage various states and implement custom power modes when *Manual Control* is enabled. The master needs to control the mode (*Mode Select*), and also manage the reference values by reseeding (*TP Reseed*).

Copyright © Azoteq 2026
All Rights Reserved

7 Trackpad

7.1 Configuration

7.1.1 Size Selection

The total number of Rx and Tx channels used for trackpad purposes must be configured (*Total Rxs* / *Total Txs*). This gives a rectangular area of channels, formed by rows and columns of Rx and Tx sensors.

7.1.2 Cycle Setup

The trackpad channels need to be packed into cycles. The Azoteq PC GUI can be used to assist with this setup. Each cycle can simultaneously sense one channel from Prox block A (Rx0-3) and one from Prox block B (Rx4-7). They must be for the same Tx, and the channel numbers are packed into the cycle numbers (*Cycle allocation registers*) accordingly. A value of 255 for the channel number indicates no channel is allocated.

It is best to select the Rxs as the even numbered sensors, so that optimal cycles/timeslot usage occurs. Similarly, a balanced number of sensors from A and B are optimal.

7.1.3 Trackpad Channel and Cycle Limitations

This product is limited to 42 channels, and 21 cycles. Any trackpad size and configuration that fits into these limits are possible to implement. Refer to Table 1.3 for more information.

7.1.4 Individual Channel Disabling

If the sensor is not a complete rectangle (this could be due to mechanical cut-outs or trackpad shape), there will be some channels that fall within the (*Total Rxs* / *Total Txs*) rectangle but do not exist. They must simply not be allocated to a sensing cycle, see Section 7.1.2. The channel numbers are however still allocated for the complete rectangle, see Section 5.1.1.

Please note that the count and reference value of a disabled (unused) channel will not read as 0 as on the IQS7210A and IQS7211A devices, but will reflect the ATI Target value.

7.1.5 Rx/Tx Mapping

The Rxs and Txs of the trackpad can be assigned to the trackpad in any order to simplify PCB layout and design. The *Rx/Tx mapping* configures which actual Rx and Tx electrodes are used for the trackpad. The Rxs are specified first, up until the number of Rxs as defined by the *Total Rxs*, then the Txs follow immediately.

Following the example in Table 5.1, the *Rx/Tx mapping* settings will be as follows:

RxTxMapping[0] = 0
RxTxMapping[1] = 4
RxTxMapping[2] = 1
RxTxMapping[3] = 5
RxTxMapping[4] = 8
RxTxMapping[5] = 10
RxTxMapping[6] = 2
RxTxMapping[7..12] = n/a

Copyright © Azoteq 2026
All Rights Reserved

7.2 Trackpad Outputs

The channel count variation (deltas) and touch status outputs are used to calculate finger location data.

7.2.1 Number of Fingers

This gives an indication of the number of active finger inputs on the trackpad (*No of fingers*).

7.2.2 Relative XY

If there is only one finger active, a *Relative X* and *Relative Y* value is available. This is a signed 2's complement 16-bit value. It is a delta of the change in X and Y, in the scale of the selected output resolution.

7.2.3 Absolute XY

For all the multi-touch inputs, the absolute finger position (*Absolute X/Y*), in the selected resolution (*Resolution X/Y*) of the trackpad, is available.

7.2.4 Touch Strength

This value (*Touch strength*) indicates the strength of the touch by giving a sum of all the deltas associated with the finger, and therefore varies according to the sensitivity setup of the sensors.

7.2.5 Area

The number of channels associated with a finger is provided here. This area is usually equal to or smaller than the number of touch channels under the finger (*Finger 1 area*) / (*Finger 2 area*).

7.2.6 Tracking Identification

The fingers are tracked from one cycle to the next, and the same finger will be in the same position in the memory map. The memory location thus identifies the finger.

7.3 Maximum Number of Multi-touches

The maximum number of allowed multi-touches is configurable (*Max multi-touches*) up to 2 points. If more than the selected value is sensed, a flag is set (*Too Many Fingers*) and the XY data is cleared.

7.4 XY Resolution

The output resolution for the X and Y coordinates are configurable (*X/Y Resolution*). The on-chip algorithms use 256 points between each row and column. The resolution is defined as the total X and total Y output range across the complete trackpad.

7.5 Stationary Touch

A stationary touch is defined as a point that does not move outside of a certain boundary within a specific time. This movement boundary or threshold can be configured (*Stationary touch movement threshold*) and is defined as a movement in either X or Y in the configured resolution.

Copyright © Azoteq 2026
All Rights Reserved

The device will switch to *Idle-Touch* mode when a stationary point is detected for the active mode timeout period, where a lower duty cycle can be implemented to save power in applications where long touches are expected.

If movement is detected, a status flag (*TP Movement*) is set.

7.6 Multi-touch Finger Split

The position algorithm looks at areas (polygons) of touches and calculates positional data from this. Two fingers near each other could have areas touching, which would merge them incorrectly into a single point. A finger split algorithm is implemented to separate these merged polygons into multiple fingers. There is a *Finger split factor* which can be adjusted to determine how aggressive this finger splitting must be implemented. A value of '0' will not split polygons, and thus merge any fingers with touch channels adjacent (diagonally also) to each other.

7.7 XY Output Flip & Switch

By default, X positions are calculated from the first column to the last column. Y positions are by default calculated from the first row to the last row. The X and/or Y output can be flipped (*Flip X / Flip Y*), to allow the [0, 0] co-ordinate to be defined as desired. The X and Y axes can also be switched (*Switch XY Axis*) allowing X to be the Txs, and Y to be along the Rxs. *Note: The channel numbers are still assigned the same way, first along the Rxs, then to the next Tx, it is not affected by this setting.*

7.8 XY Position Filtering

Stable XY position data is available due to two on-chip filters, namely the Moving Average (MAV) filter, and the Infinite Impulse Response (IIR) filter. The filters are applied to the raw positional data. It is recommended to keep both filters enabled for optimal XY data.

7.8.1 MAV Filter

If enabled (*MAV Filter*), raw XY points from the last two cycles are averaged to give the filter output.

7.8.2 IIR Filter

The IIR filter, if enabled (*IIR Filter*), can be configured to select between a dynamic and a static filter (*IIR Static*).

$$\text{Damping factor} = \text{Beta} / 256$$

Dynamic Filter

Relative to the speed of movement of a co-ordinate, the filter dynamically adjusts the amount of filtering (damping factor) performed. When fast movement is detected, and quick response is required, less filtering is done. Similarly, when a co-ordinate is stationary or moving at a slower speed, more filtering can be applied.

The damping factor is adjusted depending on the speed of movement. Three of these parameters are adjustable to fine-tune the dynamic filter if required:

- *XY dynamic filter - bottom speed*
- *XY dynamic filter - top speed*

Copyright © Azoteq 2026
All Rights Reserved

> *Dynamic filter bottom beta*

The speed is defined as the distance (in the selected resolution) travelled in one cycle (pixels/cycle).

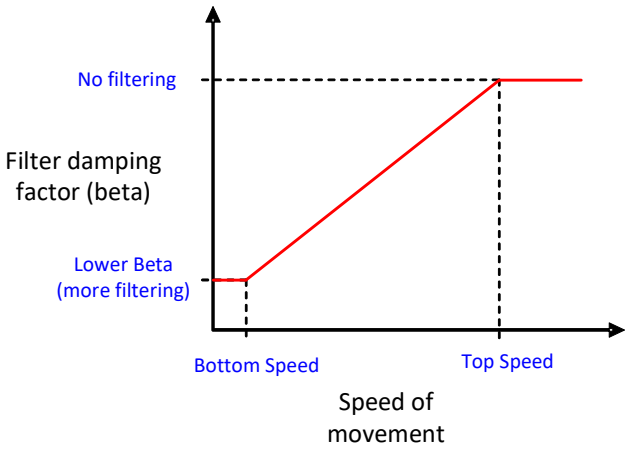

Figure 7.1: Dynamic Filter Parameters

Static Filter

Co-ordinates filtered with a fixed but configurable damping factor (*XY static beta*) are obtained when using the static filter (*IIR Static*). It is recommended that the dynamic filter is used due to the advantages of a dynamically changing damping value.

7.9 X & Y Trim

Due to boundary conditions at the edges of the trackpad, it is unlikely that the X and Y extreme values will be achievable (0 and X/Y Resolution). To be able to achieve this, the edges can be trimmed with configurable amount (*X Trim / Y Trim*) on-chip. For example, say *X Trim* is set to 0, and a finger on the left of the trackpad gives a minimum X output of 48, and a maximum of 960 for a finger to the far right (for X resolution set to 1000). Then an X Trim = 50 could be used to trim away the 'dead' area, and the full 0 to 1000 range will be achievable.

Copyright © Azoteq 2026
All Rights Reserved

8 Gestures

The IQS7211E has an on-chip gesture recognition feature for single finger gestures. The list of *gestures* recognised by the device are as follows:

- Single tap
- Double tap
- Triple tap
- Press-and-hold
- Swipe X+ (with continuous swipe configurable)
- Swipe X- (with continuous swipe configurable)
- Swipe Y+ (with continuous swipe configurable)
- Swipe Y- (with continuous swipe configurable)
- Swipe and hold X+
- Swipe and hold X-
- Swipe and hold Y+
- Swipe and hold Y-
- Palm (Flat hand)

Each single finger gesture can individually be enabled and disabled by setting or clearing the corresponding bits in the register *Gesture Enable*.

Each gesture has parameters that define and configure their functionality and are discussed in each section.

If an additional finger is detected during a gesture, it will not affect the gesture in progress, the gesture will continue evaluating the data for the first finger and react accordingly.

8.1 Single, Double and Triple Tap Gesture

The tap gestures (*Single Tap, Double Tap, Triple Tap*) require that a touch is made and released in the same location and within a short period of time. Some small amount of movement from the initial coordinate is allowed to compensate for expected finger movement while tapping on the sensor. This bound is defined in register *Tap distance*, which specifies the maximum deviation in pixels the touch is allowed to move before the tap gesture is no longer valid.

Similarly, the *Tap time* register defines the maximum touch duration (in milliseconds) that will result in a valid gesture. The period is measured from the moment a touch is registered and the touch should be released before the Tap time has elapsed.

The *Air time* parameter defines the maximum duration (in milliseconds) that is allowed between taps (thus while the finger is NOT touching the sensors) for double and triple taps to be detected. The next touch should thus be detected before the Air time is reached, starting at the moment the previous touch is released, to continue the multiple tap sequence.

With Double/Triple taps enabled, the engine first needs to wait to confirm whether the current detected tap is not part of a multi-tap gesture before the tap output can be provided. If subsequent taps are NOT enabled, then the tap gesture can be immediately reported on the release of the tap touch. If subsequent taps ARE enabled, then the current tap gesture can only be output when the Air time parameter has elapsed and no further taps have begun. For example, Double taps require an Air time waiting period if, and only if, Triple taps are enabled.

Copyright © Azoteq 2026
All Rights Reserved

Since the gesture reports after the finger is removed and no XY data is available, the location of the tap gesture is placed in the *Gesture X* and *Gesture Y* registers. This is a repetition of the location of the tap that has occurred for the main controller to utilise.

The gesture engine will clear relative XY registers (*Relative X* and *Relative Y*) to prevent small cursor movement during tap detection.

Below are numerous scenarios illustrating the tap outputs for clarity.

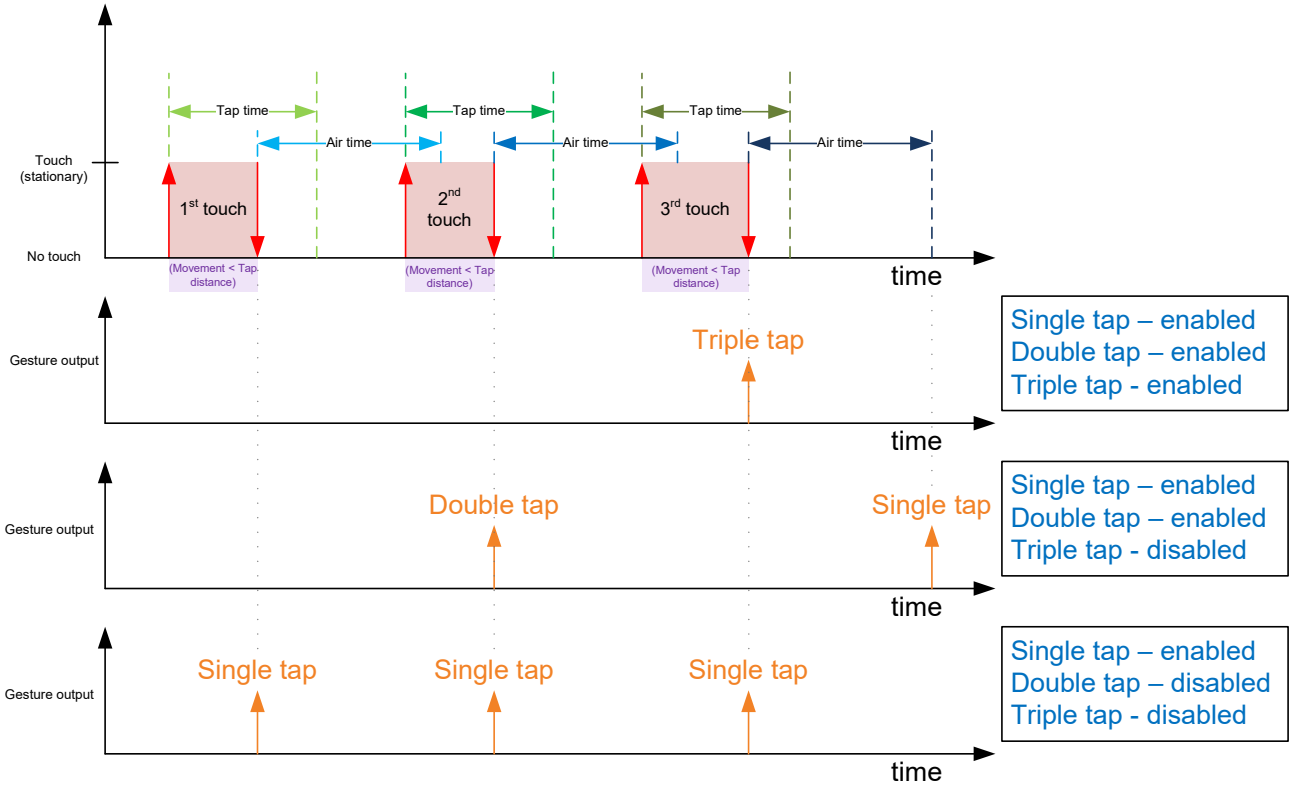

Figure 8.1: Three taps - output scenarios

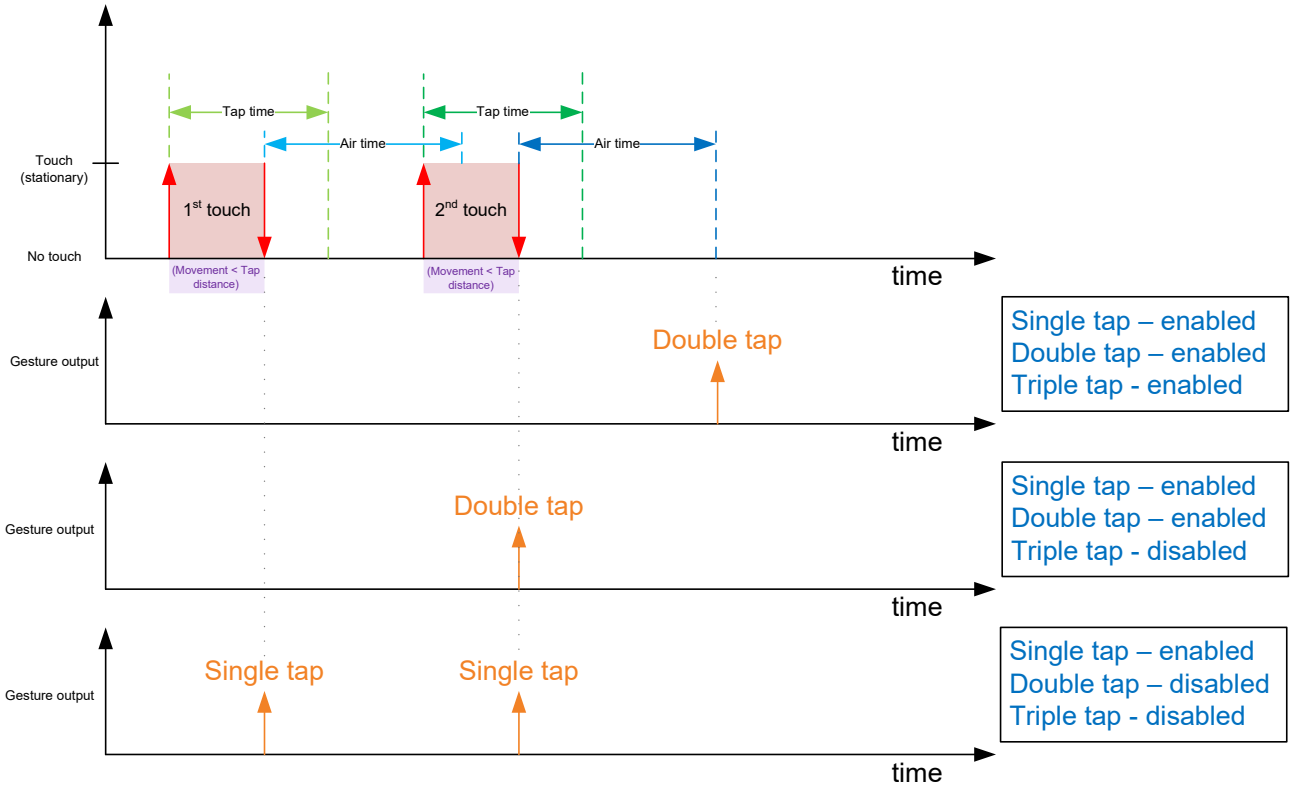

Figure 8.2: Two taps - output scenarios

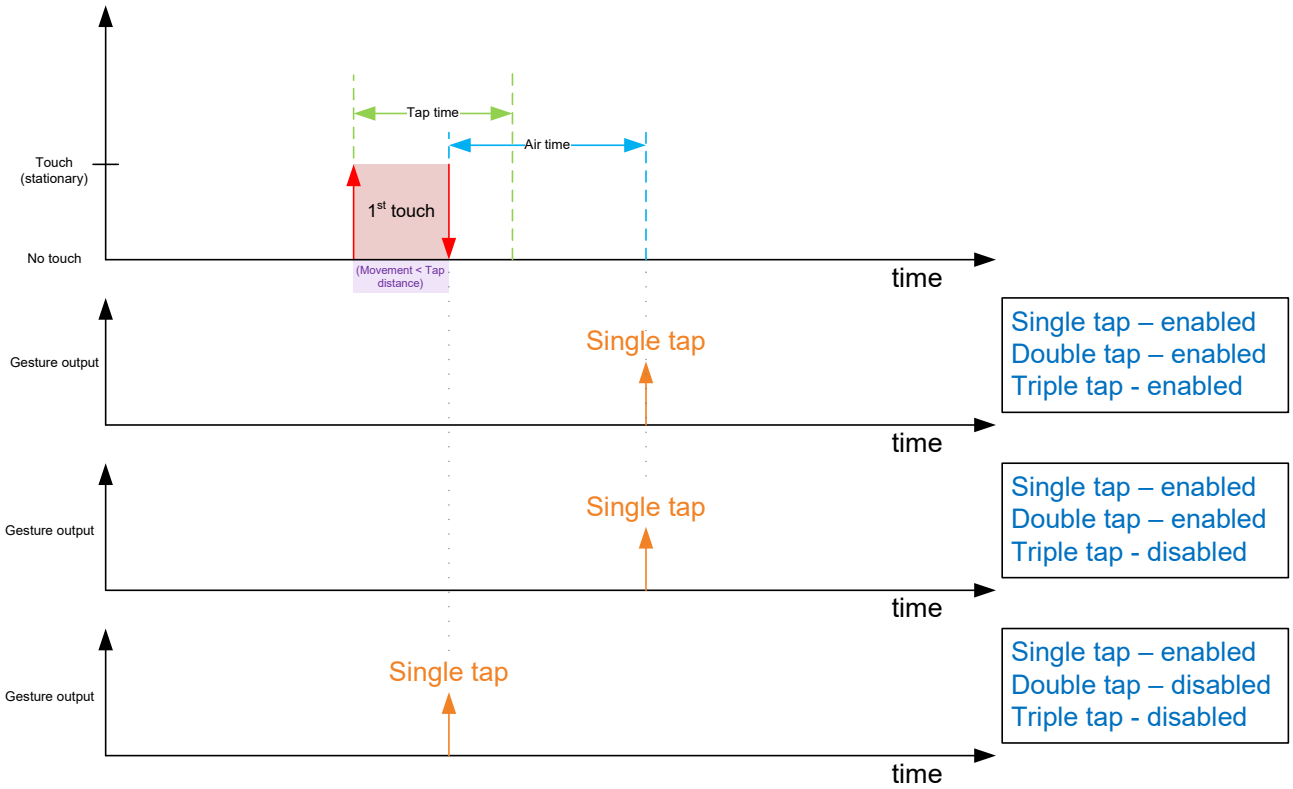

Figure 8.3: Single tap - output scenarios

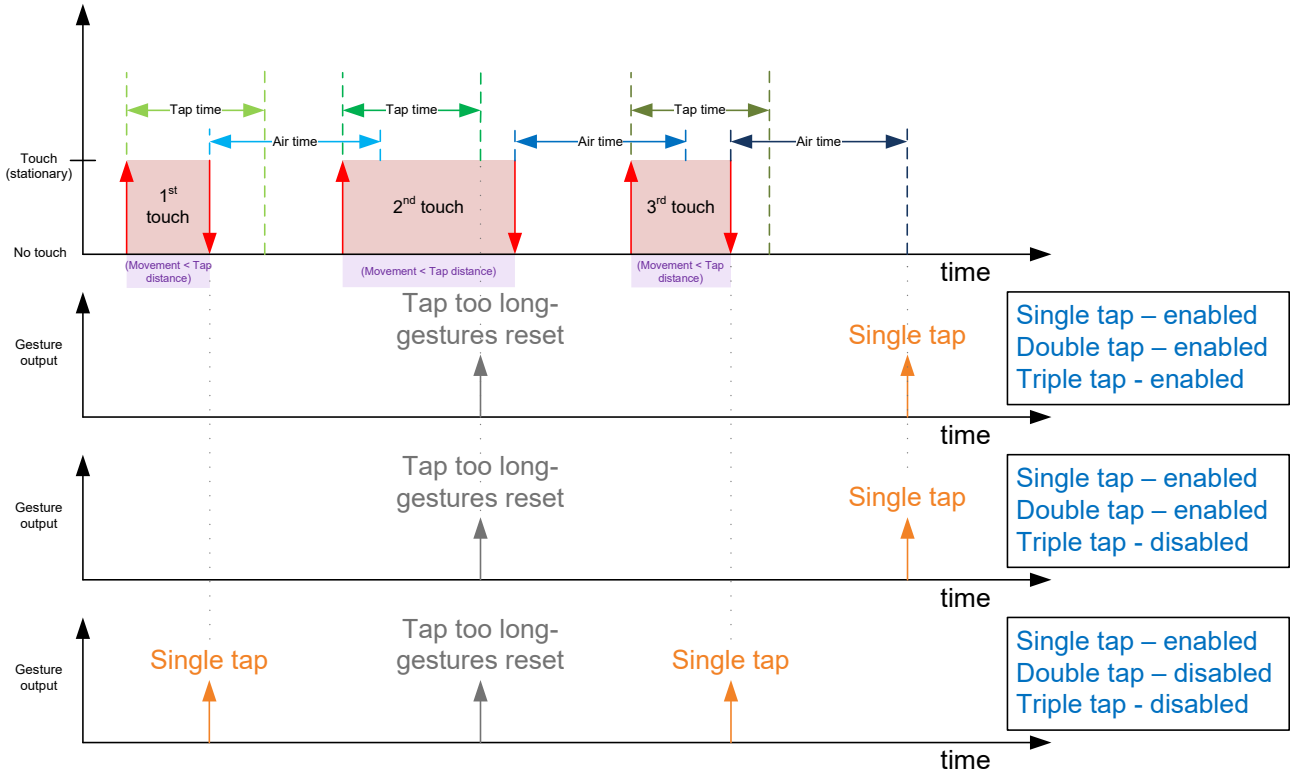

Figure 8.4: Tap time elapsed

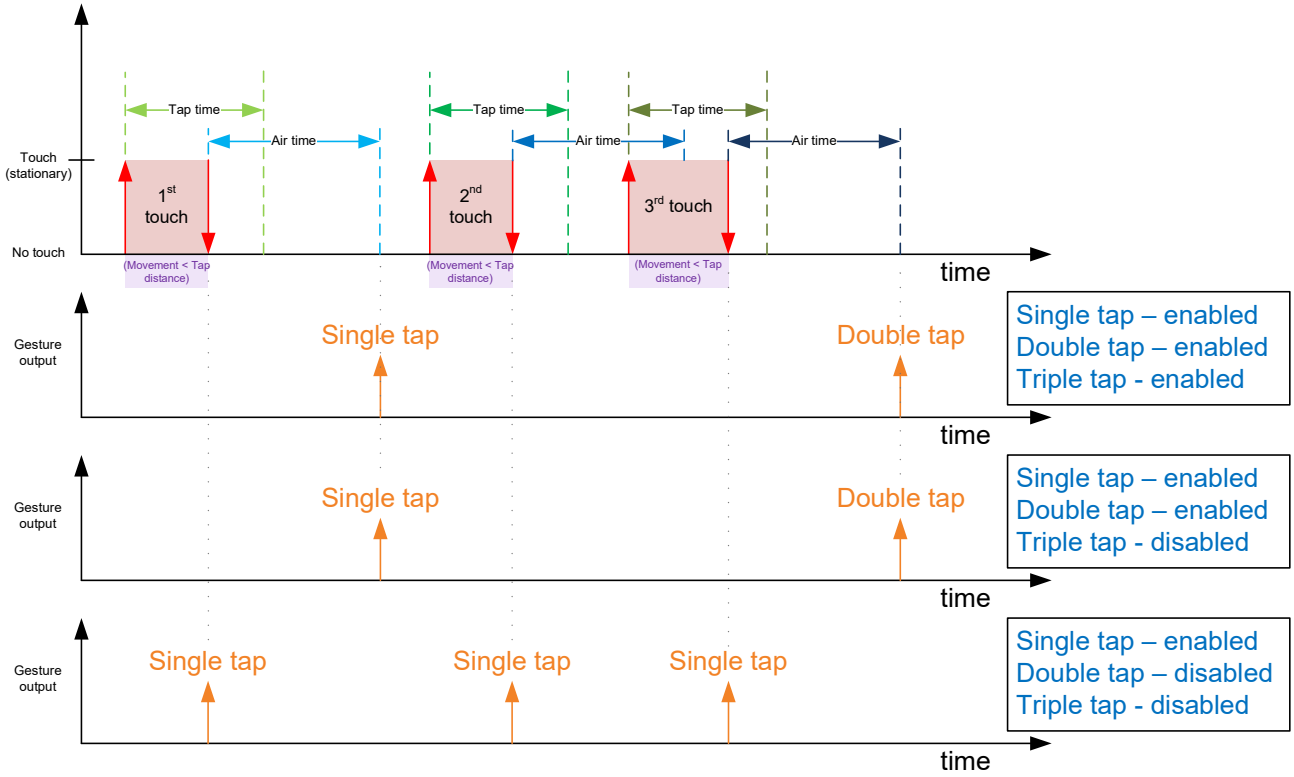

Figure 8.5: Air time elapsed

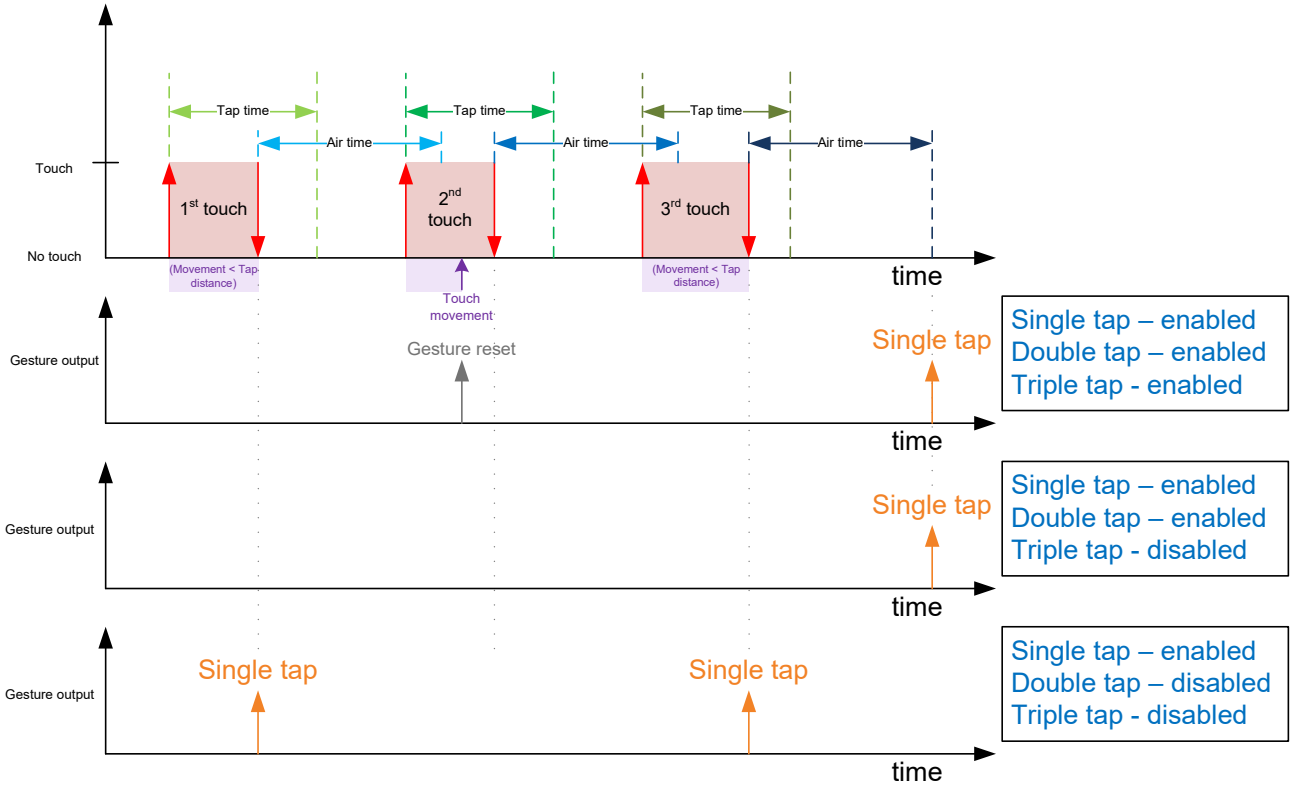

Figure 8.6: Finger movement

8.2 Press-and-Hold Gesture

The same register that defines the bounds for the single tap gesture (*Tap distance*) is used for the Press-and-hold gesture. If the touch deviates more than the specified distance, the gesture is no longer valid.

However, if the touch remains within the given bound for longer than the *Hold time* (in milliseconds), a Press-and-hold gesture will be reported (*Press-and-hold*). The gesture will continue to be reported until the specific touch is released, even if finger movement resumes. A second finger will not affect this gesture.

No data will be reported in *Relative X* and *Relative Y* before the defined maximum hold period is reached (or until tap distance is exceeded), however, the relative data will be reported as normal thereafter. This allows for features such as drag-and-drop.

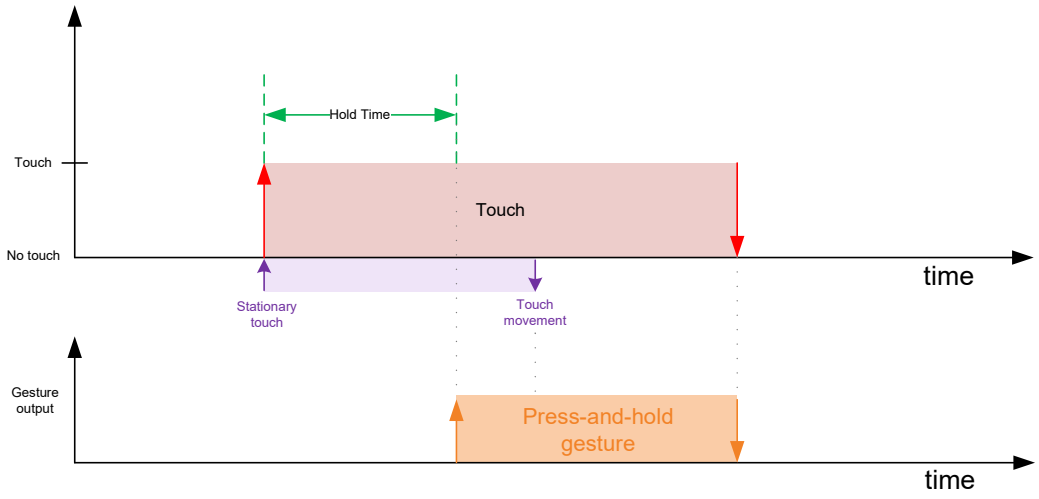

Figure 8.7: Press-and-hold

8.3 Swipe Gesture

8.3.1 Single Swipe

All four swipe gestures (*Swipe X+, Swipe X-, Swipe Y+, Swipe Y-*) work in the same manner and are only differentiated in their direction. The direction is defined with respect to the origin (0, 0) of the trackpad. If the touch is moving away from the origin, it is considered a positive swipe (+) and if it is moving towards the origin, it is a negative swipe (-). Whether the swipe is of the type X or Y is defined by which axis the touch is moving approximately parallel to.

A swipe gesture event is only reported when a moving touch meets all three of the following conditions:

1. A minimum distance is travelled from its initial coordinates, as defined in pixels by the value in registers *Swipe initial x-distance* and *Swipe initial y-distance*.
2. The distance in (1) is covered within the time specified in *Swipe time* (in milliseconds).
3. The angle of the swipe gesture, as determined by its starting coordinate and the coordinate at which conditions (1) and (2) were first met, does not exceed the threshold in *Swipe angle* with regards to at least 1 of the axes.

The respective swipe gesture will be reported for 1 cycle when all these conditions are met. The relative distance travelled each cycle will be reported in registers *Relative X* and *Relative Y* throughout.

The value in register *Swipe angle* is calculated as 64 $\tan\theta$, where θ is the desired angle (in degrees).

Copyright © Azoteq 2026
All Rights Reserved

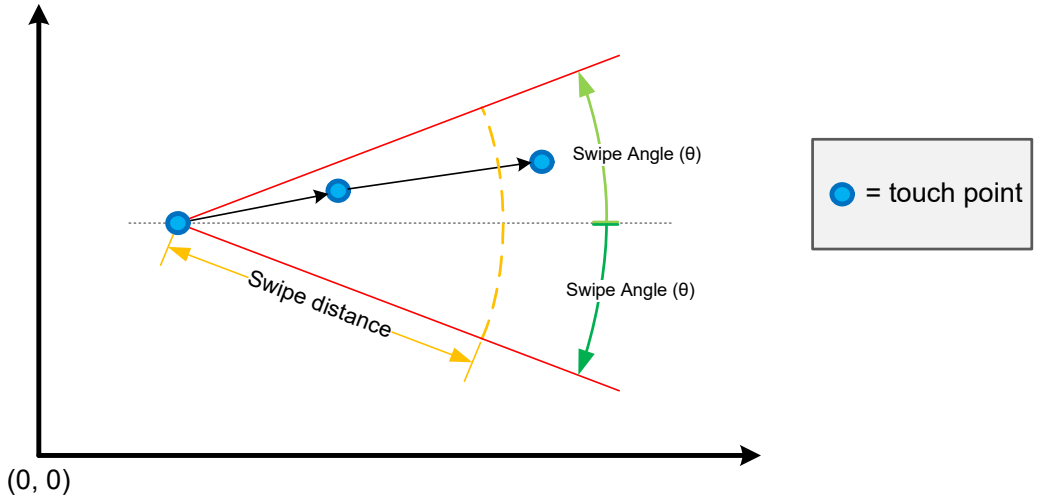

Figure 8.8: Illustration of the swipe angle requirement

Additionally, the relative X and Y movement used to determine the swipe is available in the *Gesture X* and *Gesture Y* registers. From this the swipe angle and distance can be calculated if required. This is to allow customers with orientation sensing capability to normalise the swipe to the orientation of the product. The *Swipe angle* parameter should be set to obtain 45 degrees (thus always allowing a swipe), and then the master can accept or reject swipes depending on the adjusted swipe angle calculated.

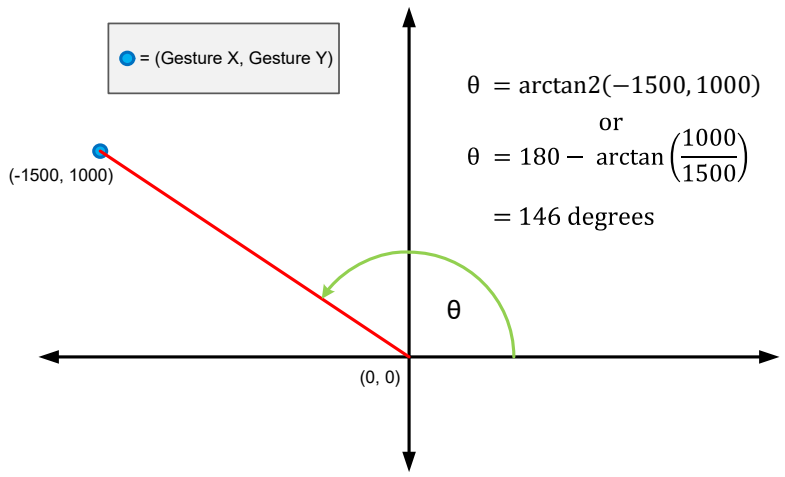

Figure 8.9: Swipe angle calculation from Gesture X/Y

Once the initial swipe has been detected, additional swipe outputs can be triggered in one of two ways during the same touch interaction. These are described in the following two sections.

8.3.2 Swipe-and-Hold

With Swipe-and-hold (*Swipe Hold X+, Swipe Hold X-, Swipe Hold Y+, Swipe Hold Y-*) enabled, the additional swipe gestures will be achieved with a stationary touch. Once the initial single swipe is detected (see Section 8.3.1), the finger that performed the swipe gesture must then become stationary. Its movement must thus be less than the *Tap Distance*, for the duration of the *Hold time*, similar to the Press-and-hold gesture. At this point the relative output (*Swipe Hold X+, Swipe Hold X-, Swipe Hold Y+, Swipe Hold Y-*) will be reported, and will then only clear upon release of the finger.

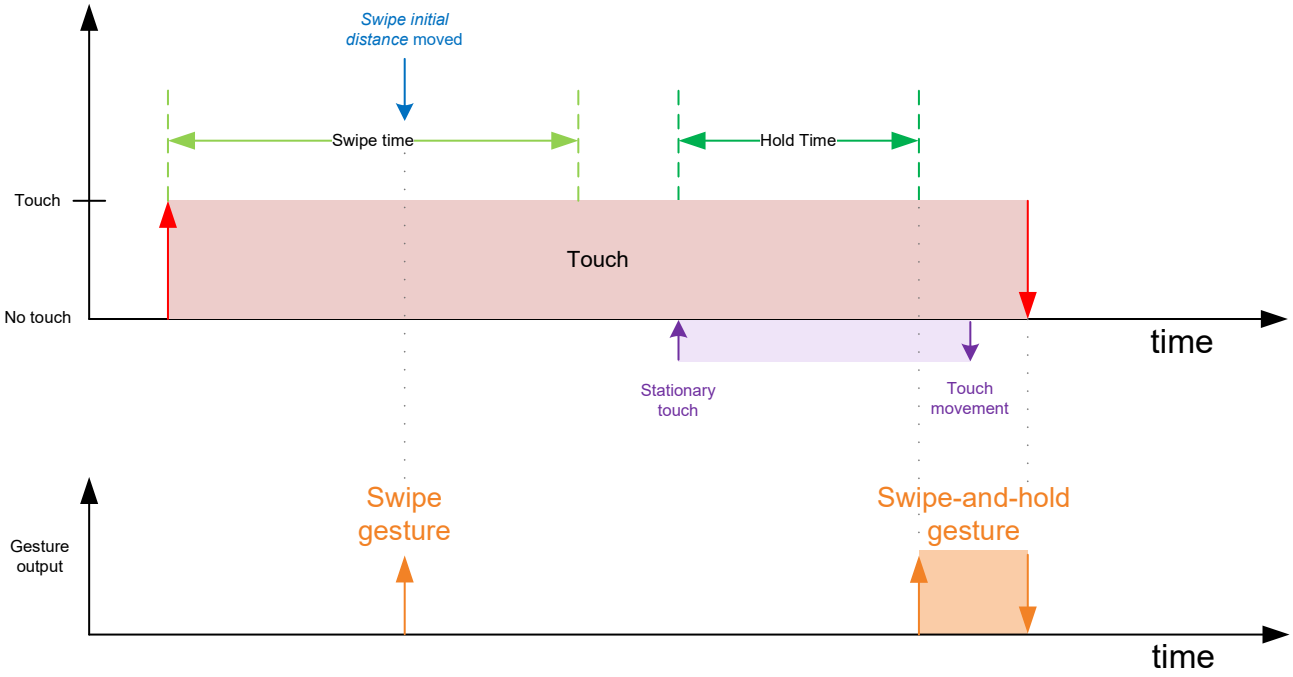

Figure 8.10: Swipe-and-Hold gesture

8.3.3 Consecutive Swipe

With Swipe-and-hold disabled, it is also possible to generate consecutive swipe gesture events during the same swipe gesture by defining the *Swipe consecutive x-distance* and *Swipe consecutive y-distance* [pixels]. Once the initial swipe gesture has been reported, additional swipe outputs will be generated when the movement exceeds the consecutive threshold, and the angle satisfies the *Swipe angle* condition, and will continue in this manner until the finger is released. Note that for consecutive swipes the time limit (*Swipe time*) is no longer applied.

To continue detecting swipes in the same axis the *Swipe consecutive distance* is used to evaluate the swipe, but to detect the other axis the *Swipe initial distance* for that axis needs to be met. The consecutive threshold is normally a shorter distance than initial, meaning switching the axis is slightly more difficult to achieve, preventing unwanted direction changes.

Copyright © Azoteq 2026
All Rights Reserved

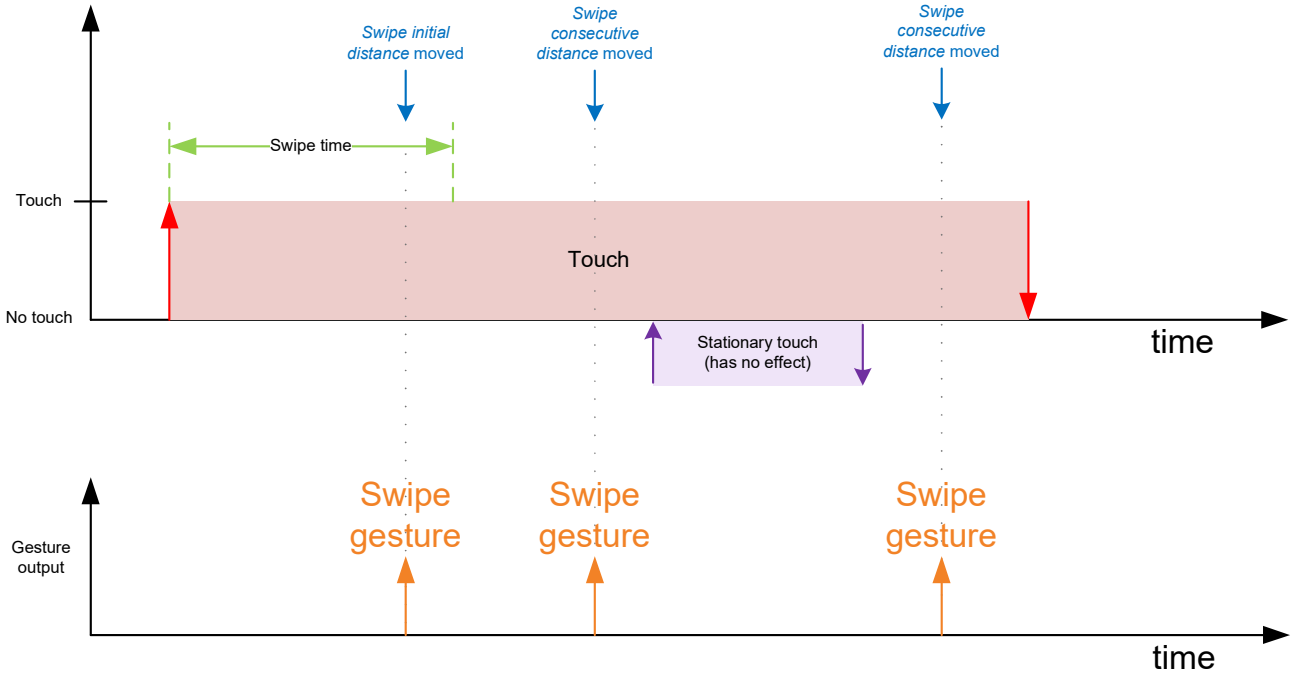

Figure 8.11: Consecutive swipe with pause

8.4 Palm Gesture (Flat Hand Gesture)

The palm gesture is used to detect the presence of a flat hand on the trackpad. Since a hand is not a perfectly flat surface, it is not expected that all channels on the trackpad will detect a touch. For this reason, the palm gesture requires a configurable (*Palm threshold*) number of channels to detect touch simultaneously for the *Palm Gesture* to be reported. Normally a high percentage of the total channels, larger than the largest allowed touch, are selected as the Palm threshold. Once the palm gesture has been detected it will require a full release (no touches) before the gesture is cleared.

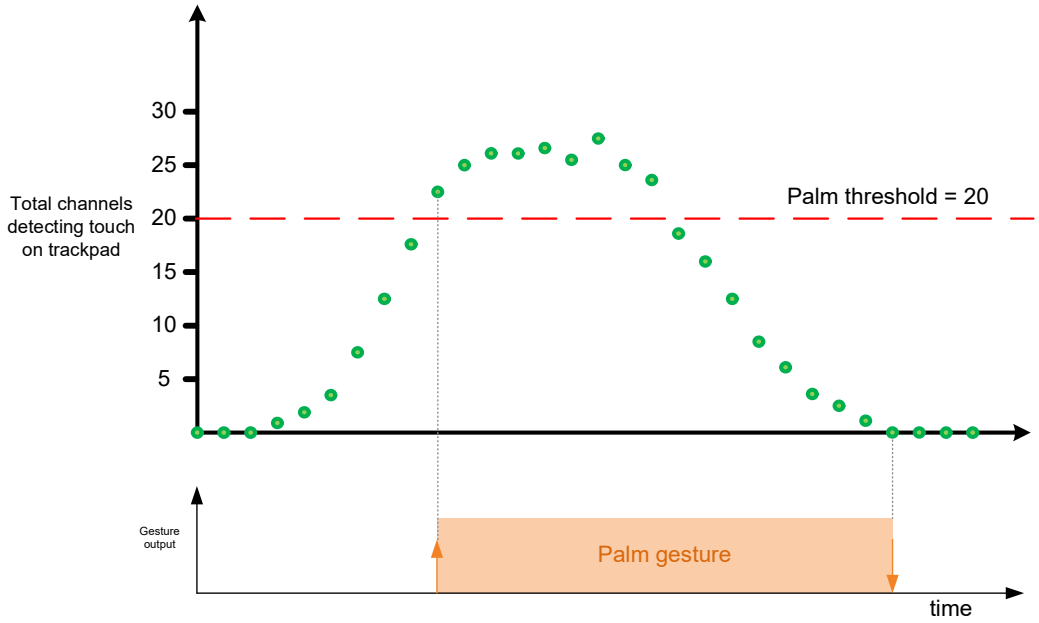

Figure 8.12: Palm gesture

9 Hardware Settings

Settings specific to hardware and the ProxSense® Module charge transfer characteristics can be changed.

Below some are described, the other hardware parameters are not discussed as they should only be adjusted under guidance of Azoteq support engineers.

9.1 Main Oscillator

The main oscillator frequency can be configured to 14 MHz or 18 MHz (*14 MHz/18 MHz*). When 18 MHz is selected the minimum VDD allowed increases, please see Section 3.2 for details.

Smaller adjustments to incrementally decrease the main oscillator can be made *Main Osc Adj*.

9.2 Charge Transfer Frequency

The charge transfer frequency (f_{xfer}) for both the trackpad and ALP channels can be configured independently. This is done by selecting appropriate *Frequency Fraction* and *Conversion Period* values to achieve the desired frequency.

For high resistance sensors (such as ITO), it might be needed to decrease f_{xfer}.

Integer Division-Based Conversion Frequency

When using integer division from the system clock (f_{OSC}), only specific values of the *Frequency Fraction* setting are valid. These values must satisfy the following condition:

$$\text{Number of clocks} = \frac{256}{\text{Frequency Fraction}}$$

where the result must be an integer with no remainder. This constraint limits the available *Fraction* and *Period* values to a fixed set, independent of the main oscillator frequency. Furthermore, the *Frequency Fraction* must be a power of 2. The supported values are listed in Table 9.1.

Table 9.1: Supported Integer Division-Based Conversion Frequency Parameters

		Conversion Frequency f_{xfer}	
FRACTION	**PERIOD**	**14 MHz f_{OSC}**	**18 MHz f_{OSC}**
32	2	1.75 MHz	2.25 MHz
16	6	875 kHz	1.12 MHz
8	14	438 kHz	562 kHz
4	30	219 kHz	281 kHz
2	62	109 kHz	141 kHz
1	126	55 kHz	70 kHz

* The maximum recommended conversion frequency for self-capacitive sensing is 1 MHz. The maximum recommended conversion frequency for mutual-capacitive sensing is 2 MHz.

Copyright © Azoteq 2026
All Rights Reserved

Non-integer Division-Based Conversion Frequency

To get a wider range of conversion frequencies, the *Frequency Fraction* can be fixed to 127, and the *Conversion Period* can be adjusted to achieve the desired frequency. This approach enables finer resolution in frequency selection, allowing values not limited to binary-related steps as seen with integer division.

Unlike the integer division approach, where the resulting frequencies are constrained to binary-related ratios, non-integer division allows more flexibility. This is useful in systems that require tuning away from specific harmonic frequencies or interference bands.

However, because the conversion frequency is no longer derived from a clean integer divide of the system clock, harmonic relationships between channels are less predictable. As a result, this mode may be more susceptible to certain types of noise or jitter.

Table 9.2: Supported Non-integer Division-Based Conversion Frequency Parameters

FRACTION	PERIOD	Conversion Frequency f_{xfer} 14 MHz f_{OSC}	Conversion Frequency f_{xfer} 18 MHz f_{OSC}
127	2	1.75 MHz	2.25 MHz
	3	1.40 MHz	1.80 MHz
	5	1.00 MHz	1.29 MHz
	7	778 kHz	1.00 MHz
	12	500 kHz	643 kHz
	16	389 kHz	500 kHz
	23	280 kHz	360 kHz

* The maximum recommended conversion frequency for self-capacitive sensing is 1 MHz. The maximum recommended conversion frequency for mutual-capacitive sensing is 2 MHz.

9.3 Reset

9.3.1 Reset Indication

After a reset, the *Show Reset* bit will be set by the system to indicate the reset event occurred. This bit will clear when the master sets the *Ack Reset*, if it becomes set again, the master will know a reset has occurred, and can react appropriately.

Note that *Event Mode* will not work until the Ack Reset has been used to clear the Show Reset bit. This allows I²C to always become active again if an unexpected reset has occurred, allowing the master to react accordingly to the Show Reset flag, such as writing the start-up settings if needed.

9.3.2 Software Reset

The IQS7211E can be reset by means of an I²C command (*SW Reset*). This reset will take effect shortly after the SW Reset bit has been set and the I²C communication window terminated.

9.3.3 Hardware Reset

The MCLR/RDY pin (active LOW) can be used to reset the device when outside an I²C communication window. For more details see Section 4.2.

Copyright © Azoteq 2026
All Rights Reserved

10 Additional Features

10.1 GUI for Parameter Setup

The Azoteq product GUI can be utilised to configure the optimal settings required for the specific hardware. The device performance can be easily monitored and evaluated in the graphical environment until the optimal configuration is obtained. Once these parameters have been finalised, there are two options for production, namely to program the IC with the firmware integrated with the specific settings/parameters, or to use a default configured IC and then perform the device setup over I^2C after power-up.

10.1.1 Automated Start-up

If the IC is programmed with the application firmware bundled with settings specifically configured for the current hardware, then an automated start-up is achieved. These parameters are used as the default values without requiring any setup from the master. After power-up the device will automatically use the settings and perform the configuration/setup accordingly.

For large volume orders Azoteq can provide pre-programmed devices with customer specific firmware.

Two bytes (*Settings version number*) are available so that the designer can label and identify the user selected default start-up settings. This allows the master to verify if the device firmware has the intended configuration as required.

10.1.2 Manual Start-up

If the device is not programmed with customer specific settings, then they need to be configured by the master via I^2C. The parameters can still be obtained using the GUI, but then these need to be configured in the memory map accordingly.

The device will thus be programmed with defaults not necessarily applicable to the current application. It is recommended that the whole memory map is overwritten to be sure all settings are as intended. Once this has been done set the re-ATI bits for the trackpad and ALP channel, so that the ATI can be executed on the intended settings.

10.2 Suspend

The IQS7211E can be placed into a suspended state, where no processing is performed, minimal power is consumed (<1.5 µA), and the device retains existing data. This state is entered after the communication session that sets the *Suspend* bit.

The device can be woken from suspend by forcing I^2C communication (see Section 11.9.2) and clearing the suspend bit in that communication session. An automatic reseed of the trackpad is triggered after the device is woken from suspend, since it cannot be guaranteed that the reference values are still relevant.

10.3 Watchdog Timer (WDT)

A software watchdog timer is implemented to improve system reliability.

The working of this timer is as follows:

Copyright © Azoteq 2026
All Rights Reserved

- A software timer t_{WDT} is linked to the LFTMR (Low frequency timer) running on the “always on" Low Frequency Oscillator (10 kHz).
- This timer is reset at a strategic point in the main loop.
- Failing to reset this timer will cause the appropriate ISR (interrupt service routine) to run.
- This ISR performs a software triggered POR (Power on Reset).
- The device will reset, performing a full cold boot.

10.4 RF Immunity

The IQS7211E has immunity to high power RF noise. To improve the RF immunity, extra decoupling capacitors are suggested on V_{REGA}, V_{REGD} and V_{DD}.

Place a 100 pF in parallel with the 2.2 µF ceramic on V_{REGA}, V_{REGD} and V_{DD}. All decoupling capacitors should be placed as close as possible to the V_{DD} and V_{REG} pads.

If needed, series resistors can be added to Rx electrodes to reduce RF coupling into the sensing pads. Normally these are in the range of 470 Ω-1 kΩ. PCB ground planes also improve noise immunity.

10.5 Additional Non-Trackpad Channels

Unused mutual capacitive channels can be used to design additional buttons or sliders. Note that the channels will still provide XY data output, which can be ignored (or utilised) by the master. Please note that the additional sensors will have to use the same global ATI and sensitivity parameters, so careful sensor design is needed to ensure that these parameters are applicable. We suggest the button sensor design is identical to the trackpad sensor, with the same overlay material and thickness. Please contact Azoteq if you consider this option.

10.6 Version Information

See *Table A.1*.

Copyright © Azoteq 2026
All Rights Reserved

11 I²C Interface

11.1 I²C Module Specification

The device supports a standard two wire I²C interface with the addition of an RDY (ready interrupt) line. The communications interface of the IQS7211E supports the following:

- *Fast-mode-plus* standard I²C up to 1 MHz.
- Streaming data as well as event mode.
- The master may address the device at any time according to the comms request setting, see Section 11.9.2. However for optimal usage, such as power consumption, the RDY is strongly recommended.
- The provided interrupt line (RDY) is an open-drain active low implementation and indicates a communication window.

The IQS7211E implements 8-bit addressing with 2 bytes at each address. Two consecutive read/writes are required in this memory map structure. The two bytes at each address will be referred to as “byte 0" and “byte 1".

11.2 I²C Address

The IQS7211E has a fixed I²C address of 0x56.
Other address options exist on special request. Please contact Azoteq.

11.3 I³C Compatibility

This device is not compatible with an I³C bus due to clock stretching allowed for data retrieval.

11.4 Memory Map Addressing

11.4.1 8-bit Address

Most of the memory map implements an 8-bit addressing scheme for the required user data. For all application requirements this should be adequate.

11.4.2 Extended 16-bit Address

For development purposes larger blocks of data (such as the trackpad 16-bit channel count values) are found in an extended 16-bit memory addressable location. It is possible to only address each Block as an 8-bit address, and then continue to clock into the next address locations. For example, address 0xE000 is where the trackpad count values are located. If you thus do the following, you will read the count values from address 0xE000 to 0xE003:

Copyright © Azoteq 2026
All Rights Reserved

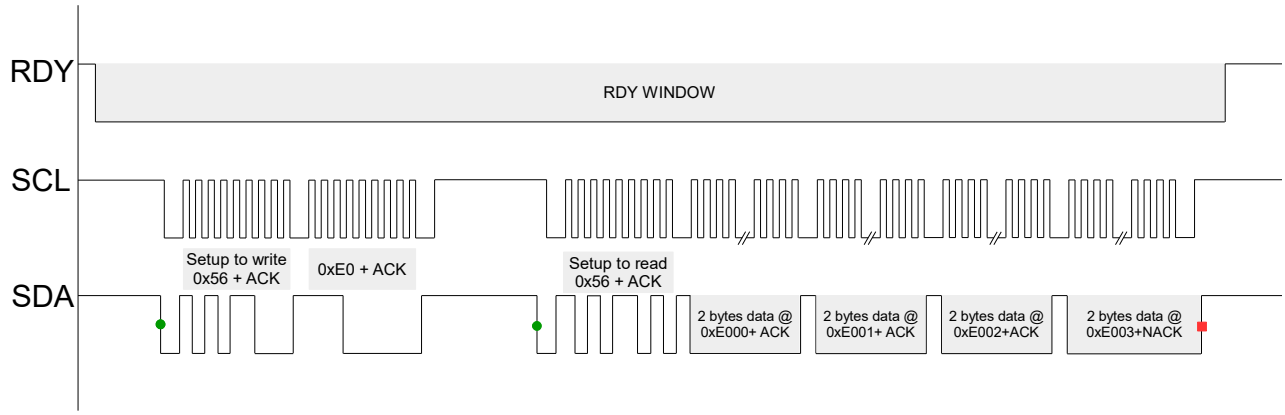

Figure 11.1: Extended Addressing Comms Diagram

However, if you need to address a specific byte in that extended memory map space, then you will need to address using the full 16-bit address (note the 16-bit address is high byte first, unlike the data which is low byte first):

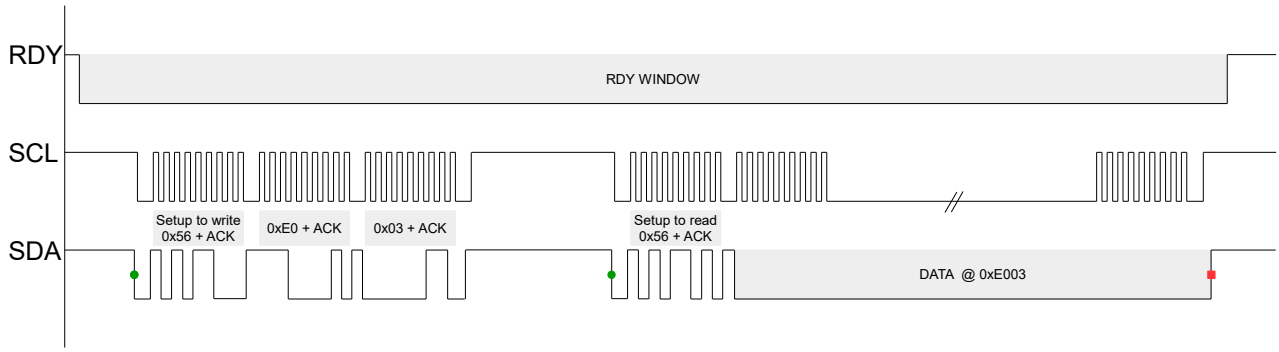

Figure 11.2: Extended Addressing Comms Diagram (Specific Channel)

11.5 Data

The data is 16-bit words, meaning that each address obtains 2 bytes of data. For example, address 0x10 will provide two bytes, then the next two bytes read will be from address 0x11. The 16-bit data is sent in little endian byte order (least significant byte first).

11.6 I²C Timeout

If the communication window is not serviced within the *I²C timeout period* (in milliseconds), the session is ended (RDY goes HIGH), and processing continues as normal. This allows the system to continue and keep reference values up to date even if the master is not responsive, however the corresponding data was missed/lost, and this should be avoided.

11.7 Terminate Communication

With the comms end setting cleared (*Comms End Cmd*), a standard I²C STOP ends the current communication window. If multiple I²C transactions need to be done, then they should be strung together using repeated-start conditions instead of giving a STOP. This will allow the communication to occur in the same session.

Copyright © Azoteq 2026
All Rights Reserved

The alternative option with comms end setting set, is that an I²C command is needed to terminate the communication window. This can be done by writing 0x00 to address 0xFF, followed by a STOP as follows:

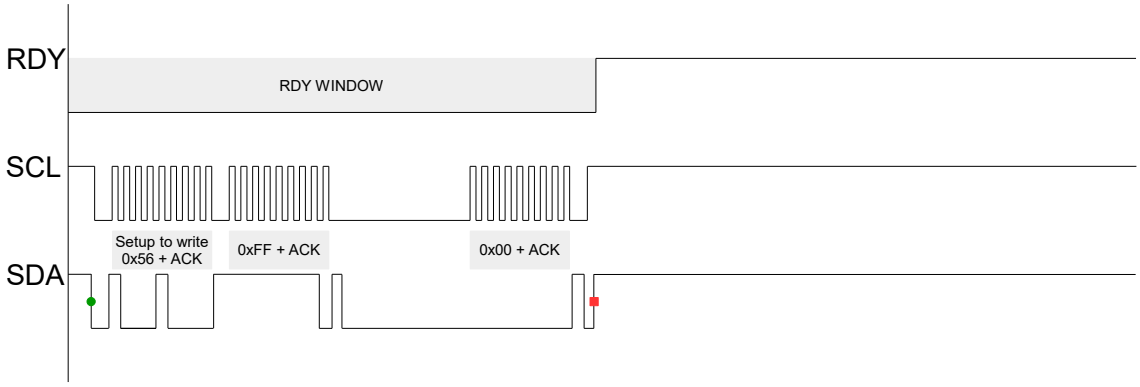

Figure 11.3: Terminate Comms Diagram

11.8 RDY/IRQ

The communication has an open-drain active-LOW RDY signal to inform the master that updated data is available. It is optimal for the master to use this as an interrupt input and obtain the data accordingly. It is also useful to allow the master MCU to enter low-power/sleep allowing wake-up from the touch device when user presence is detected.

11.9 Event Mode Communication

The device can be set up to bypass the communication window when no activity is sensed (*Event Mode*). This is usually enabled since the master does not want to be interrupted unnecessarily during every cycle if no activity occurred. The communication will resume (RDY will indicate available data) if an enabled event occurs. It is recommended that the RDY be placed on an interrupt-on-pin-change input on the master.

Note that Event Mode will only implement if *Show Reset* has been cleared, see Section 9.3.1.

11.9.1 Events

Numerous events can be individually enabled to trigger communication, they are:

- Gesture events (*Gesture Event*): *enabled gestures* will trigger event.
- Trackpad events (*TP Event*): event triggered if there is a change in X/Y value, or if a finger is added or removed from the trackpad.
- Touch events (*TP Touch Event*): event only triggers if a channel has a change in a touch state. This is mostly aimed at channels that are used for traditional buttons, where you want to know only when a status is changed.
- Re-ATI (*Re-ATI Event*): one communication cycle is given to indicate the re-ATI occurred (*TP / ALP Re-ATI Occurred*).
- Proximity/Touch on ALP (*ALP Event*): event given on state change.

Copyright © Azoteq 2026
All Rights Reserved

11.9.2 Force Communication/Polling

The master can initiate communication even while RDY is HIGH (inactive). The default method (*comms request en* set to 0) is that the IQS7211E will clock stretch until an appropriate time to complete the I²C transaction. The master firmware will not be affected (if clock stretching is correctly handled).

If the associated clock stretching cannot be allowed, then an alternative comms request method can be enabled (*Comms Request EN*). To achieve this, the master will do communication when RDY is not active (thus forcing comms), and it will write a comms request to the device. This comms request is as follows:

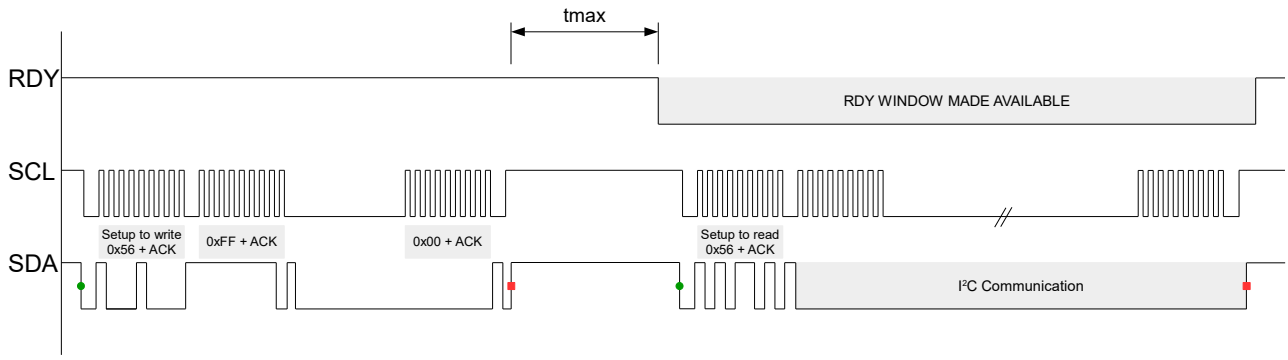

Figure 11.4: Force Comms Diagram

After this request for communication has been sent, then the next available communication window will become available as normal (thus RDY going LOW).

For optimal program flow, it is suggested that RDY is used to sync on new data. The forced/polling method is only recommended if the master must perform I²C and Event Mode is active.

11.9.3 Force Communication Clock Stretching Issue

A known issue exists in firmware v1.1 of the IQS7211E where the device may clock stretch for an extended period during forced communication attempts under specific conditions.

The IQS7211E supports two methods of initiating communication when the RDY line is not active (i.e., RDY = HIGH). These two methods depend on the (*Comms Request EN*) setting:

- **Comms Request EN = 0**: Forcing communication will clock stretch until a communication window opens.
- **Comms Request EN = 1**: The host sends a communication request command. RDY will then assert LOW once a communication window is available.

In firmware v1.1, the device does not correctly evaluate the *Comms Request EN = 0* setting when operating in low power modes LP1 and LP2, with *Auto-Prox* enabled. As a result, when using *Comms Request EN = 0* to force communication under these conditions, the device will clock stretch for an extended period while it completes its internal Auto-Prox scan cycles.

Copyright © Azoteq 2026
All Rights Reserved

Table 11.1: Force Comms Clock Stretching Behaviour Summary

Condition	FW v1.1
LP1/LP2 active with Auto-Prox Enabled + *Comms Request EN = 0*	Long clock stretching
LP1/LP2 active with Auto-Prox Disabled + *Comms Request EN = 0*	Short clock stretching
LP1/LP2 active with Auto-Prox Enabled + *Comms Request EN = 1*	No clock stretching

- To avoid long clock stretching delays in firmware v1.1, use *Comms Request EN = 1* when forcing communication with Auto-Prox enabled.
- Alternatively, disable Auto-Prox during low power modes if using *Comms Request EN = 0*.

11.10 Invalid Communications Return

The device will give an invalid communication response (0xEE) under the following conditions:

- The host is trying to read from a memory map register that does not exist.
- The host is trying to read from the device outside of a communication window (i.e. while RDY = high)

Copyright © Azoteq 2026
All Rights Reserved

12 I²C Memory Map - Register Descriptions

For a more detailed description please see *Appendix A*.

Address	Data (16bit)		Notes
0x00 - 0x09	Version details		See Table A.1
0x0A	Relative X		See Section 7.2.2
0x0B	Relative Y		
0x0C	Gesture X		See Section 8.1 and 8.3
0x0D	Gesture Y		
0x0E	Gestures		See Table A.2
0x0F	Info flags		See Table A.3
0x10	Finger 1 X-coordinate		See Section 7.2.3
0x11	Finger 1 Y-coordinate		
0x12	Finger 1 touch strength		See Section 7.2.4
0x13	Finger 1 area		See Section 7.2.5
0x14	Finger 2 X-coordinate		See Section 7.2.3
0x15	Finger 2 Y-coordinate		
0x16	Finger 2 touch strength		See Section 7.2.4
0x17	Finger 2 area		See Section 7.2.5
0x18	Touch status <0>		See Table A.4
0x19	Touch status <1>		
0x1A	Touch status <2>		
0x1B	ALP channel count		See Section 5.3.2
0x1C	ALP channel LTA		See Section 5.4.2
0x1D	ALP count A		See Section 5.3.2
0x1E	ALP count B		
	End of Read Only Section		
	(HIGH byte)	(LOW byte)	
	Start of Read/Write Section		
0x1F	ALP ATI compensation A		See Section 5.6.3
0x20	ALP ATI compensation B		
0x21	Trackpad ATI multiplier/dividers (Global)		See Table A.5
0x22	Trackpad reference drift limit	Trackpad ATI compensation divider (Global)	See Section 5.7.2 and 5.6.4
0x23	Trackpad ATI target		See Section 5.6.3
0x24	Trackpad minimum count re-ATI value		See Section 5.7.2
0x25	ALP ATI multiplier/dividers		See Table A.5
0x26	ALP LTA drift limit	ALP ATI compensation divider	See Section 5.7.2 and 5.6.4
0x27	ALP ATI target		See Section 5.6.3
	(HIGH byte)	(LOW byte)	
0x28	Active mode report rate (ms)		See Section 6.1
0x29	Idle-Touch mode report rate (ms)		
0x2A	Idle mode report rate (ms)		
0x2B	LP1 mode report rate (ms)		
0x2C	LP2 mode report rate (ms)		

Copyright © Azoteq 2026
All Rights Reserved

0x2D	Active mode timeout (s)		See Section 6.2
0x2E	Idle-Touch mode timeout (s)		
0x2F	Idle mode timeout (s)		
0x30	LP1 mode timeout (s)		
0x31	Reference update time (s)	Re-ATI retry time (s)	See Section 5.4.1 and 5.7.3
0x32	I^2C timeout (ms)		See Section 11.6
	(HIGH byte)	(LOW byte)	
0x33	System control		See Table A.6
0x34	Config settings		See Table A.7
0x35	Other settings		See Table A.8
0x36	ALP setup		See Table A.9
0x37	ALP Tx enable		See Table A.10
	(HIGH byte)	(LOW byte)	
0x38	Touch clear multiplier	Touch set multiplier	See Section 5.5.1
0x39	ALP threshold		See Section 5.5.2
0x3A	ALP clear debounce	ALP set debounce	See Section 5.5.3
0x3B	ALP LTA filter beta - LP1 mode	ALP count filter beta - LP1 mode	See Section 5.3.2 and 5.4.2
0x3C	ALP LTA filter beta - LP2 mode	ALP count filter beta - LP2 mode	
0x3D	Trackpad conversion frequency		See Table A.11
0x3E	ALP conversion frequency		
0x3F	Trackpad hardware settings		See Table A.12
0x40	ALP hardware settings		
	(HIGH byte)	(LOW byte)	
0x41	Total Rxs	Trackpad settings	See Table A.13 and Section 7.1.1
0x42	Max multi-touches	Total Txs	See Section 7.1.1 and 7.3
0x43	X resolution		See Section 7.4
0x44	Y resolution		
0x45	XY dynamic filter - bottom speed		See Section 7.8.2
0x46	XY dynamic filter - top speed		
0x47	Static filter beta value	Dynamic filter bottom beta	
0x48	Finger split factor	Stationary touch movement threshold	See Section 7.6 and 7.5
0x49	Y trim value	X trim value	See Section 7.9
	(HIGH byte)	(LOW byte)	
0x4A	Settings major version	Settings minor version	See Section 10.1.1
0x4B	Gesture enable		See Table A.14
0x4C	Tap time (ms)		See Section 8.1
0x4D	Air time (ms)		
0x4E	Tap distance (pixels)		
0x4F	Hold time (ms)		See Section 8.2
0x50	Swipe time (ms)		See Section 8.3
0x51	Swipe initial x-distance (pixels)		
0x52	Swipe initial y-distance (pixels)		
0x53	Swipe consecutive x-distance (pixels)		
0x54	Swipe consecutive y-distance (pixels)		

Copyright © Azoteq 2026
All Rights Reserved

0x55	Palm Threshold	Swipe angle (64tan(deg))	See Section 8.3 and 8.4
0x56	RxTx mapping <1..0>		See Section 7.1.5
0x57	RxTx mapping <3..2>		
0x58	RxTx mapping <5..4>		
0x59	RxTx mapping <7..6>		
0x5A	RxTx mapping <9..8>		
0x5B	RxTx mapping <11..10>		
0x5C	*do not use*	RxTx mapping <12>	
	(HIGH byte)	(LOW byte)	
0x5D	ProxA channel for cycle-0	0x05	See Section 7.1.2
0x5E	0x05	ProxB channel for cycle-0	
0x5F	ProxB channel for cycle-1	ProxA channel for cycle-1	
0x60	ProxA channel for cycle-2	0x05	
0x61	0x05	ProxB channel for cycle-2	
0x62	ProxB channel for cycle-3	ProxA channel for cycle-3	
0x63	ProxA channel for cycle-4	0x05	
0x64	0x05	ProxB channel for cycle-4	
0x65	ProxB channel for cycle-5	ProxA channel for cycle-5	
0x66	ProxA channel for cycle-6	0x05	
0x67	0x05	ProxB channel for cycle-6	
0x68	ProxB channel for cycle-7	ProxA channel for cycle-7	
0x69	ProxA channel for cycle-8	0x05	
0x6A	0x05	ProxB channel for cycle-8	
0x6B	ProxB channel for cycle-9	ProxA channel for cycle-9	
	(HIGH byte)	(LOW byte)	
0x6C	ProxA channel for cycle-10	0x05	See Section 7.1.2
0x6D	0x05	ProxB channel for cycle-10	
0x6E	ProxB channel for cycle-11	ProxA channel for cycle-11	
0x6F	ProxA channel for cycle-12	0x05	
0x70	0x05	ProxB channel for cycle-12	
0x71	ProxB channel for cycle-13	ProxA channel for cycle-13	
0x72	ProxA channel for cycle-14	0x05	
0x73	0x05	ProxB channel for cycle-14	
0x74	ProxB channel for cycle-15	ProxA channel for cycle-15	
0x75	ProxA channel for cycle-16	0x05	
0x76	0x05	ProxB channel for cycle-16	
0x77	ProxB channel for cycle-17	ProxA channel for cycle-17	
0x78	ProxA channel for cycle-18	0x05	
0x79	0x05	ProxB channel for cycle-18	
0x7A	ProxB channel for cycle-19	ProxA channel for cycle-19	
0x7B	ProxA channel for cycle-20	0x05	
0x7C	0x01 *(NOTE not 0x05)*	ProxB channel for cycle-20	
	End of Read/Write Section		
	Begin of Read Only Section		
0xE0[i] ...	Trackpad count values		See Section 5.3.1
0xE1[i] ...	Trackpad reference values		See Section 5.4.1
0xE2[i] ...	Trackpad delta values		See Section 5.3.4
0xE3[i] ...	Trackpad ATI compensation values		See Section 5.6.3

[i] extended memory map

Copyright © Azoteq 2026
All Rights Reserved

	End of Read Only Section	

13 Implementation and Layout

13.1 Layout Fundamentals

Note: Information in the following Applications section is not part of the Azoteq component specification, and Azoteq does not warrant its accuracy or completeness. Azoteq's customers are responsible for determining the suitability of components for their purposes. Customers should validate and test their design implementation to confirm system functionality.

13.1.1 Power Supply Decoupling

Azoteq recommends connecting a combination of a 4.7 µF plus a 100 pF low-ESR ceramic decoupling capacitor between the VDD and VSS pins. Higher-value capacitors may be used but can impact supply rail ramp-up time. Decoupling capacitors must be placed as close as possible to the pins that they decouple (within a few millimetres).

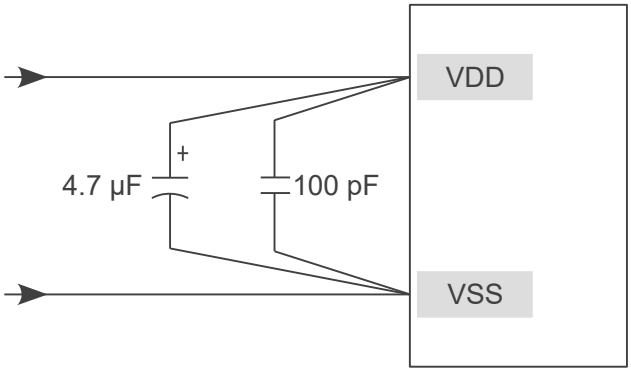

Figure 13.1: Recommended Power Supply Decoupling

13.1.2 VREG Capacitors

Each VREG pin requires a 2.2 µF capacitor to regulate the LDO internal to the device. This capacitor must be placed as close as possible to the IC. Figure 13.2 below shows an example placement of the VREG capacitors.

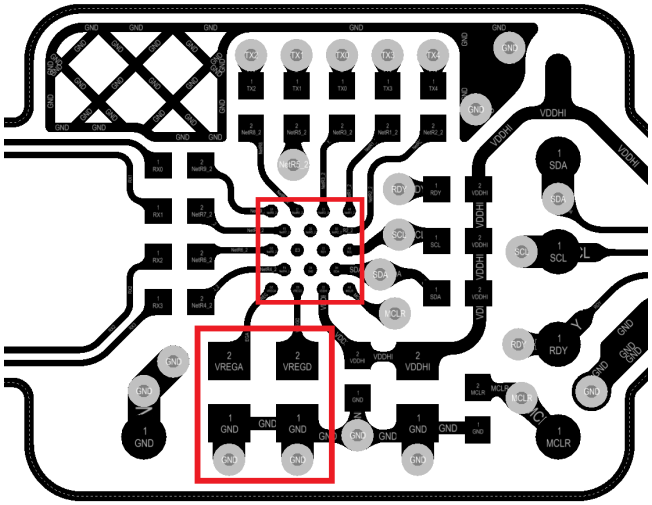

Figure 13.2: VREG Capacitor Placement Close to IC

Copyright © Azoteq 2026
All Rights Reserved

13.1.3 WLCSP Light Sensitivity

The CSP package is sensitive to infrared light. When the silicon IC is subject to the photo-electric effect, an increase in leakage current is experienced. Due to the low power consumption of the IC this causes a change in signal and is common in the semiconductor industry with CSP devices.

If the IC could be exposed to IR in the product, then a dark glob-top epoxy material should cover the complete package to block infrared light. It is important to use sufficient material to completely cover the corners of the package. The glob-top also provides further advantages such as mechanical strength and shock absorption.

Copyright © Azoteq 2026
All Rights Reserved

14 Ordering Information

14.1 Ordering Code

IQS7211E zzz ppb

Table 14.1: Order Code Description

IC NAME				IQS7211E
POWER-ON CONFIGURATION	zzz	=	001 002[i]	NRFND Default settings. Setup via I²C.
PACKAGE TYPE	pp	=	CS QF QN	WLCSP-18 package QFN-20 package QFN-20 package (On special order only[ii])
BULK PACKAGING	b	=	R	WLCSP-18 Reel (3000 pcs/reel) QFN-20 Reel (2000 pcs/reel)

Example : IQS7211E001QFR

14.2 Top Marking

14.2.1 WLCSP18 Package

Product Name
ppp = product code
xx = batchcode

14.2.2 QFN20 Package Marking Option 1

Product Name
ppp = product code
xx = batchcode

[i] Please refer to product information notice PIN-230172 for more details
[ii] Special order codes are subject to larger minimum order quantities, longer lead times and are non-cancelable, non-returnable.

Copyright © Azoteq 2026
All Rights Reserved

14.2.3 QFN20 Package Marking Option 2

Product Name
ppp = product code
xx = batchcode

Copyright © Azoteq 2026
All Rights Reserved

15 Package Specification

15.1 Package Outline Description – QFN20 (QFR)

This package outline is specific to order codes ending in *QFR*.

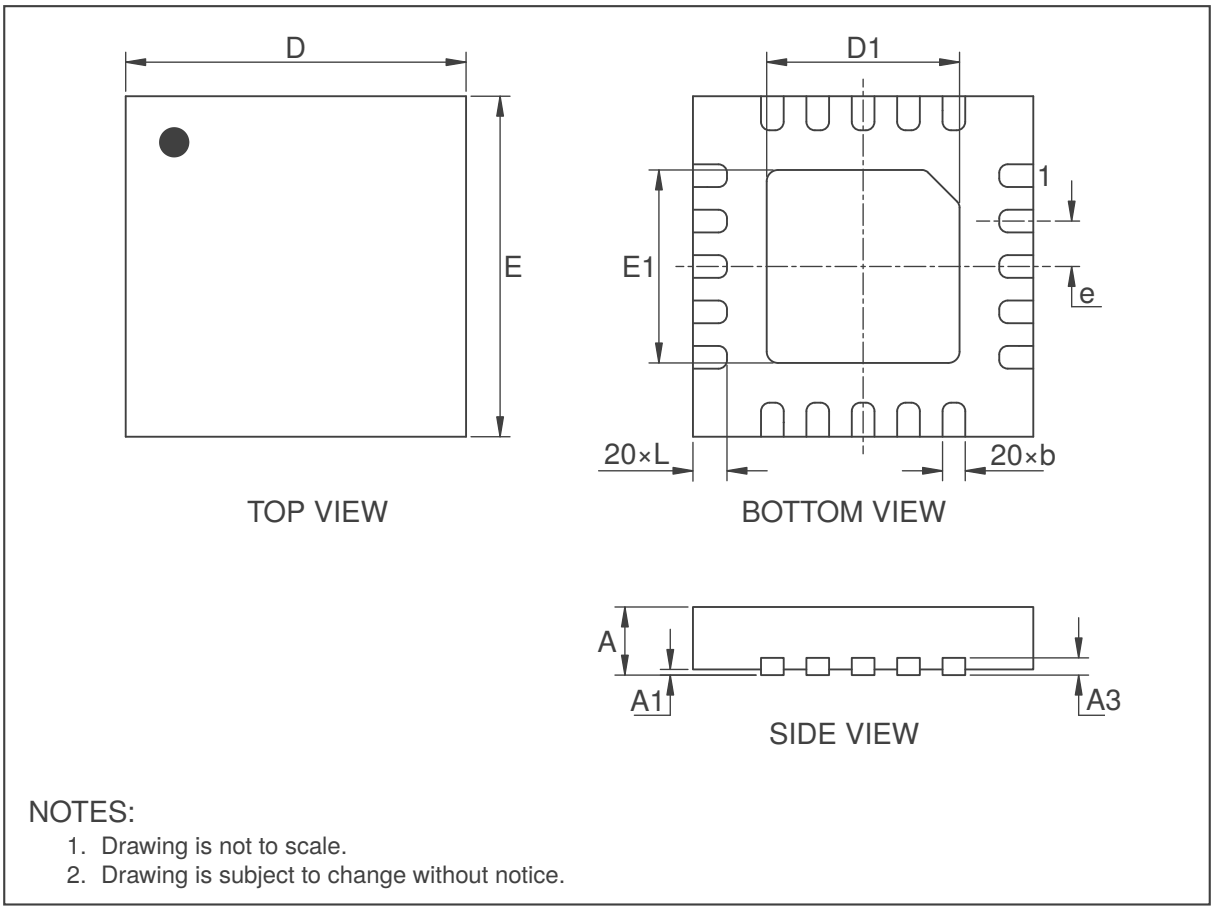

Figure 15.1: QFN (3x3)-20 (QFR) Package Outline Visual Description

Table 15.1: QFR (3x3)-20 Package Outline Dimensions [mm]

Dimension	Min	Nom	Max
A	0.50	0.55	0.60
A1	0	0.02	0.05
A3		0.152 REF	
b	0.15	0.20	0.25
D	2.95	3.00	3.05
E	2.95	3.00	3.05
D1	1.60	1.70	1.80
E1	1.60	1.70	1.80
e		0.40 BSC	
L	0.25	0.30	0.35

Copyright © Azoteq 2026
All Rights Reserved

15.2 Recommended PCB Footprint – QFN20 (QFR)

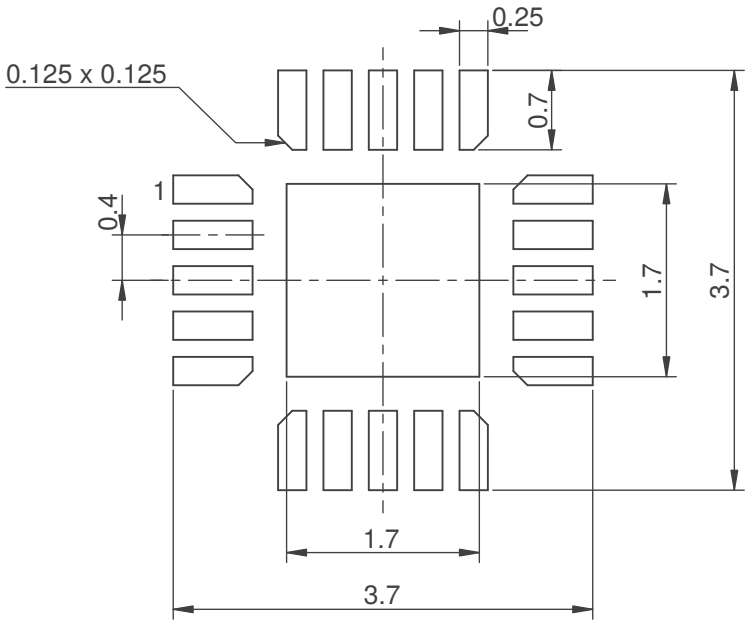

RECOMMENDED FOOTPRINT

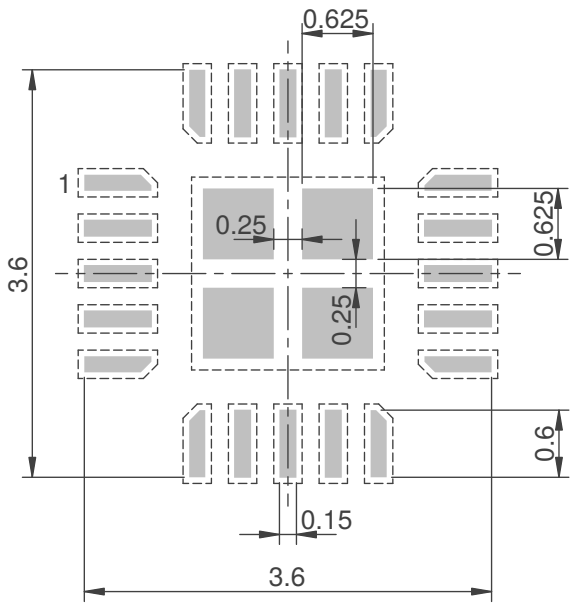

RECOMMENDED SOLDER PASTE APPLICATION

NOTES:

1. Dimensions are expressed in millimeters.
2. Drawing is not to scale.
3. Drawing is subject to change without notice.
4. Final dimensions may vary due to manufacturing tolerance considerations.
5. Customers should consult their board assembly site for solder paste stencil design recommendations.

Figure 15.2: QFN (3x3)-20 (QFR) Recommended Footprint

15.3 Package Outline Description – QFN20 (QNR)

This package outline is specific to order codes ending in *QNR*.

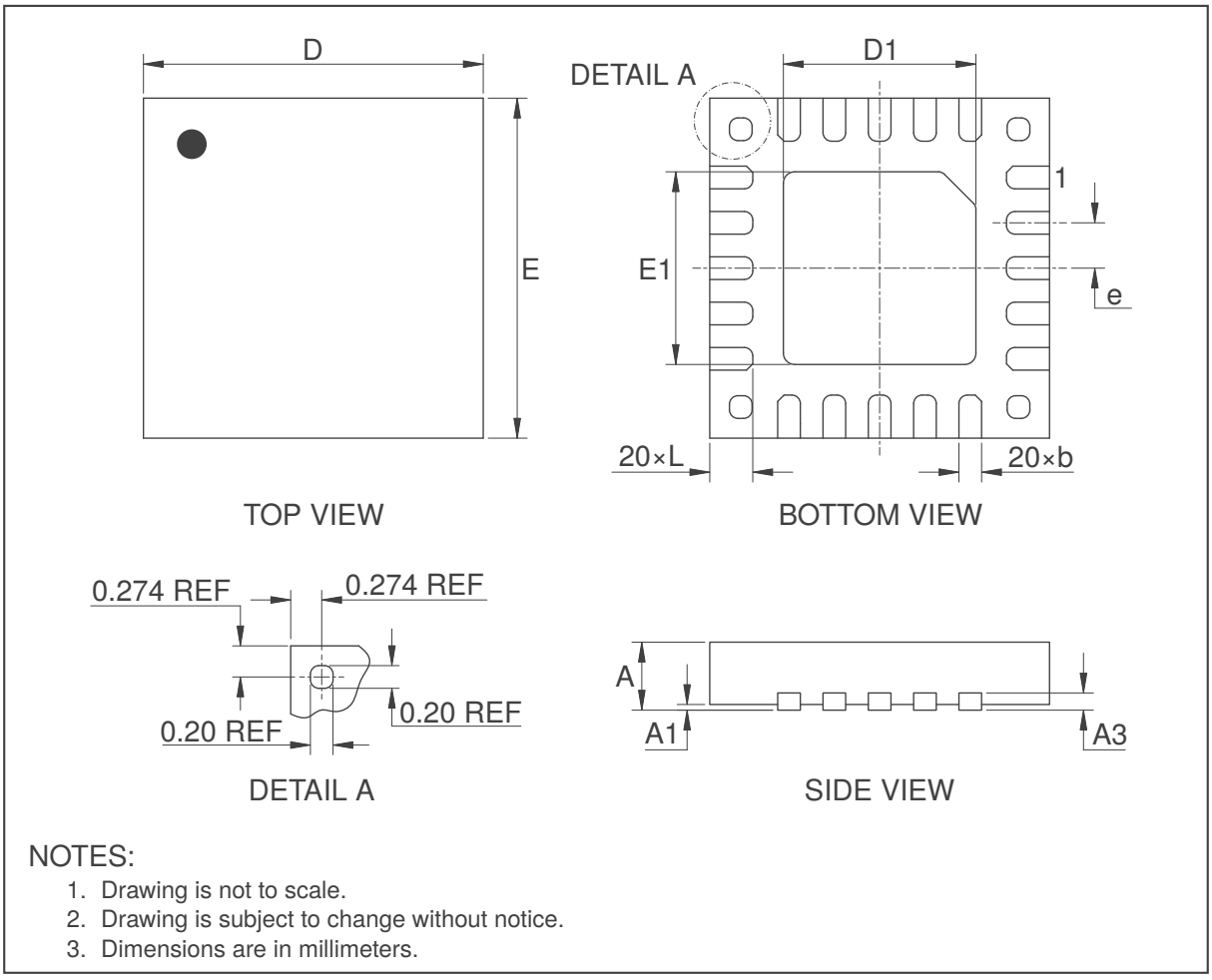

Figure 15.3: QFN (3x3)-20 (QNR) Package Outline Visual Description

Table 15.2: QNR (3x3)-20 Package Outline Dimensions [mm]

Dimension	Min	Nom	Max
A	0.50	0.55	0.60
A1	0		0.05
A3		0.152 REF	
b	0.15	0.20	0.25
D	2.95	3.00	3.05
E	2.95	3.00	3.05
D1	1.65	1.70	1.75
E1	1.65	1.70	1.75
e		0.40 BSC	
L	0.33	0.38	0.43

Copyright © Azoteq 2026
All Rights Reserved

15.4 Recommended PCB Footprint – QFN20 (QNR)

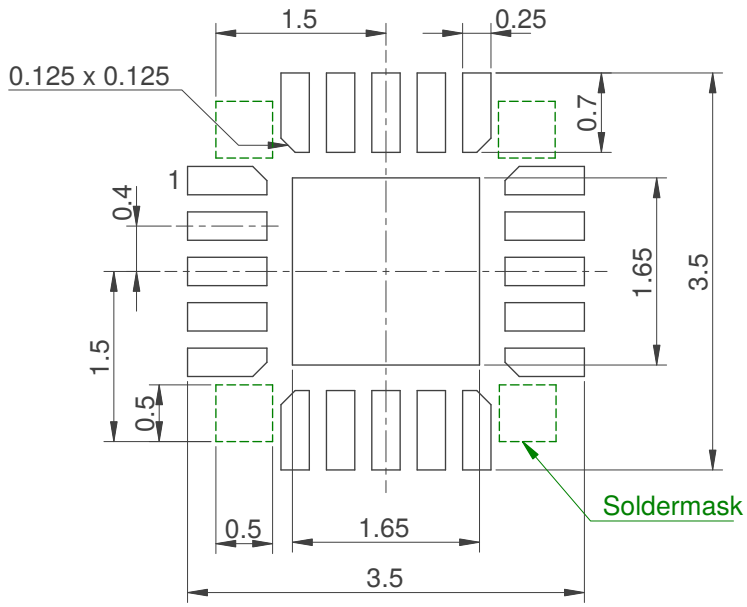

RECOMMENDED FOOTPRINT

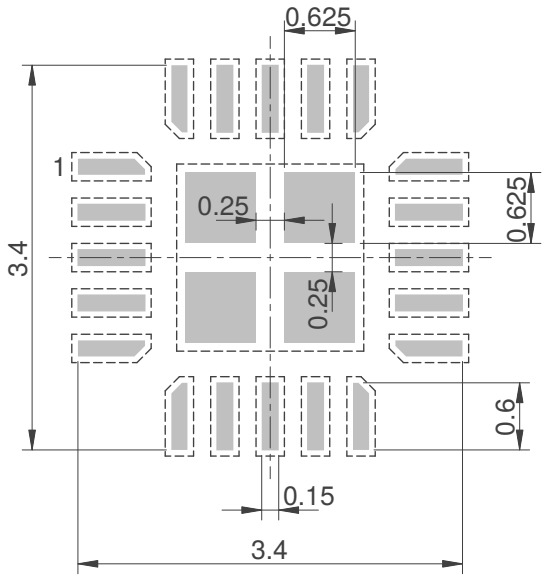

RECOMMENDED SOLDER PASTE APPLICATION

NOTES:

1. Dimensions are expressed in millimeters.
2. Drawing is not to scale.
3. Drawing is subject to change without notice.
4. Final dimensions may vary due to manufacturing tolerance considerations.
5. Customers should consult their board assembly site for solder paste stencil design recommendations.
6. Solder mask (or exposed copper keep-out) areas necessary to avoid any traces shorting to exposed corner pads.

Figure 15.4: QFN (3x3)-20 (QNR) Recommended Footprint

15.5 Package Outline Description – WLCSP18

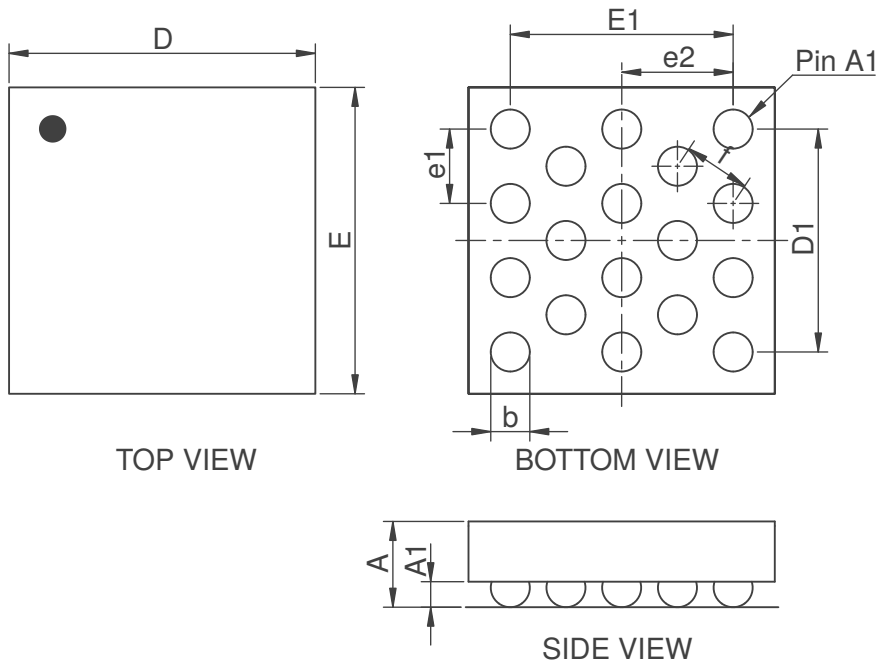

NOTES:
1. Drawing is not to scale.
2. Drawing is subject to change without notice.

Figure 15.5: WLCSP (1.62x1.62)-18 Package Outline Visual Description

Table 15.3: WLCSP (1.62x1.62)-18 Package Dimensions [mm]

Dimension	Min	Nom	Max
A	0.477	0.525	0.573
A1	0.180	0.200	0.220
b	0.221	0.260	0.299
D	1.605	1.620	1.635
E	1.605	1.620	1.635
D1	1.200 BSC		
E1	1.200 BSC		
e1	0.400 BSC		
e2	0.600 BSC		
f	0.360 REF		

Copyright © Azoteq 2026
All Rights Reserved

15.6 Recommended PCB Footprint – WLCSP18

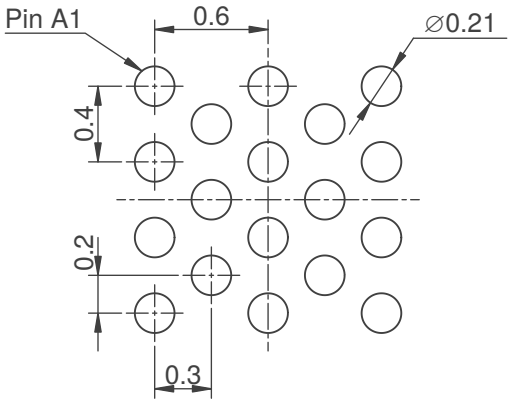

RECOMMENDED FOOTPRINT

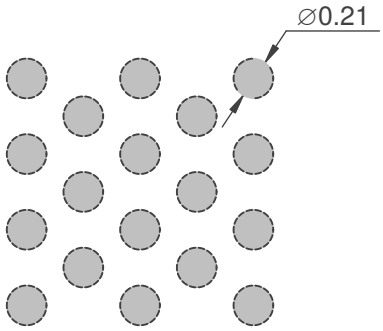

RECOMMENDED SOLDER PASTE APPLICATION

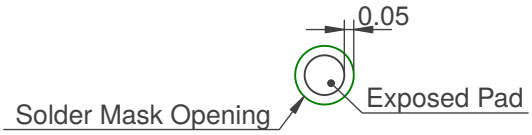

SOLDER MASK BACK-OFF

NOTES:

1. Dimensions are expressed in millimeters.
2. Drawing is not to scale.
3. Drawing is subject to change without notice.
4. Final dimensions may vary due to manufacturing tolerance considerations.
5. Customers should consult their board manufacturer for solder mask tolerances.
6. Customers should consult their board assembly site for solder paste stencil design recommendations.

Figure 15.6: WLCSP18 Recommended Footprint

Copyright © Azoteq 2026
All Rights Reserved

15.7 Tape and Reel Specifications

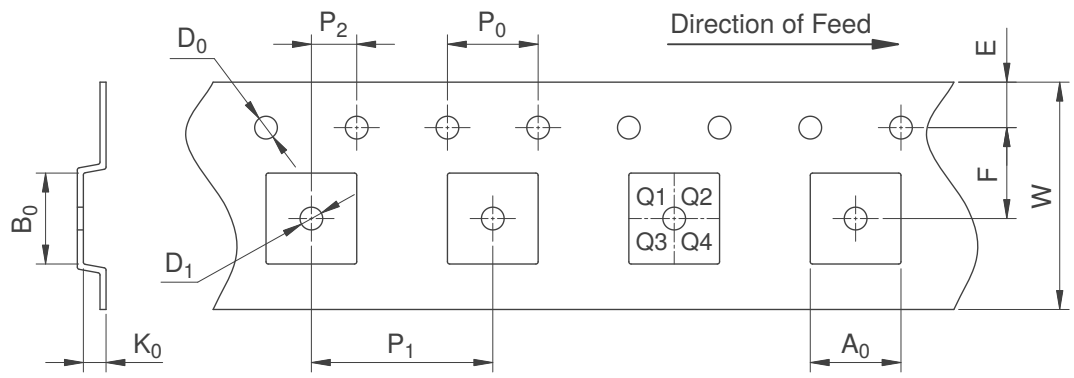

NOTES:
1. Drawing is not to scale.
2. Drawing is subject to change without notice.

Figure 15.7: Carrier Tape Specification

Table 15.4: Carrier Tape Dimensions [mm]

Dimension	Package		
	WLCSP18	QFN20 (QFR)	QFN20 (QNR)
A_0	1.78	3.30	3.30
B_0	1.78	3.30	3.30
K_0	0.69	0.75	0.80
D_0	1.50	1.50	1.55
D_1	0.50	1.55	1.50
E	1.75	1.75	1.75
F	3.50	5.50	5.50
P_0	4.00	4.00	4.00
P_1	4.00	8.00	8.00
P_2	2.00	2.00	2.00
W	8.00	12.00	12.00
Pin 1 Quadrant	Q1	Q2	Q2

Copyright © Azoteq 2026
All Rights Reserved

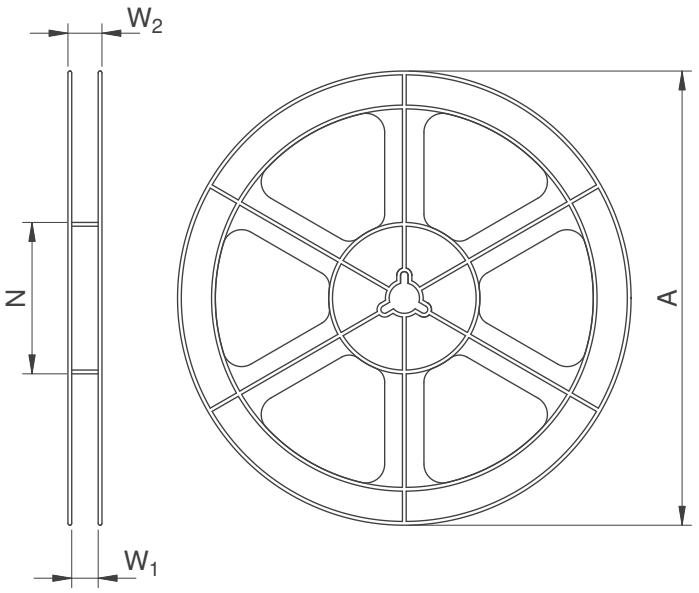

NOTES:
1. Drawing is not to scale.
2. Drawing is subject to change without notice.

Figure 15.8: Reel Specification

Table 15.5: Reel Dimensions [mm]

Dimension	Package		
	WLCSP18	QFN20 (QFR)	QFN20 (QNR)
A	179	178	180
N	55	60	60
W_1	8.4	12.4	12.4
W_2 (Max)	14.4	18.4	18.4

Copyright © Azoteq 2026
All Rights Reserved

15.8 Moisture Sensitivity Levels

Table 15.6: Moisture Sensitivity Levels

Package	MSL
QFN20	1
WLCSP18	1

15.9 Reflow Specifications

Contact Azoteq

Copyright © Azoteq 2026
All Rights Reserved

A Memory Map Descriptions

Table A.1: Version Information

Register:	0x00 - 0x09		
Address	**Category**	**Name**	**Value**
0x00	Application Version Info	Product Number	1112
0x01		Major Version	1
0x02		Minor Version	1
0x03		Patch Number (Commit hash)	0x59C2C977
0x04			
0x05	ROM Library Version Info	Library Number	206
0x06		Major Version	4
0x07		Minor Version	15
0x08		Patch Number (Commit hash)	0x16688405
0x09			

Table A.2: Gestures (0x0E)

Bit15	Bit14	Bit13	Bit12	Bit11	Bit10	Bit9	Bit8	Bit7	Bit6	Bit5	Bit4	Bit3	Bit2	Bit1	Bit0
Swipe and Hold Y-	Swipe and Hold Y+	Swipe and Hold X-	Swipe and Hold X+	Swipe Y-	Swipe Y+	Swipe X-	Swipe X+	Reserved			Palm Ges-ture	Press-and-Hold	Triple Tap	Double Tap	Single Tap

- Bit 15: **Swipe and Hold Y-** - Swipe and hold in negative Y direction
  - 0: No gesture
  - 1: Swipe and hold in negative Y direction occurred
- Bit 14: **Swipe and Hold Y+** - Swipe and hold in positive Y direction
  - 0: No gesture
  - 1: Swipe and hold in positive Y direction occurred
- Bit 13: **Swipe and Hold X-** - Swipe and hold in negative X direction
  - 0: No gesture
  - 1: Swipe and hold in negative X direction occurred
- Bit 12: **Swipe and Hold X+** - Swipe and hold in positive X direction
  - 0: No gesture
  - 1: Swipe and hold in positive X direction occurred
- Bit 11: **Swipe Y-** - Swipe in negative Y direction
  - 0: No gesture
  - 1: Swipe in negative Y direction occurred
- Bit 10: **Swipe Y+** - Swipe in positive Y direction
  - 0: No gesture
  - 1: Swipe in positive Y direction occurred
- Bit 9: **Swipe X-** - Swipe in negative X direction
  - 0: No gesture
  - 1: Swipe in negative X direction occurred
- Bit 8: **Swipe X+** - Swipe in positive X direction
  - 0: No gesture
  - 1: Swipe in positive X direction occurred
- Bit 7-5: Unused
- Bit 4: **Palm Gesture**- Indicates a Palm gesture
  - 0: No gesture
  - 1: Palm gesture occurred
- Bit 3: **Press-and-Hold**- Indicates a Press-and-hold gesture
  - 0: No gesture
  - 1: Press-and-hold occurred

Copyright © Azoteq 2026
All Rights Reserved

- Bit 2: **Triple Tap**- Indicates a triple tap gesture
  - 0: No gesture
  - 1: Triple tap occurred
- Bit 1: **Double Tap**- Indicates a double tap gesture
  - 0: No gesture
  - 1: Double tap occurred
- Bit 0: **Single Tap**- Indicates a single tap gesture
  - 0: No gesture
  - 1: Single tap occurred

Table A.3: Info Flags (0x0F)

Bit15	Bit14	Bit13	Bit12	Bit11	Bit10	Bit9	Bit8	Bit7	Bit6	Bit5	Bit4	Bit3	Bit2	Bit1	Bit0
Reserved	ALP Output	Reserved	Too Many Fingers	Reserved	TP Movement	No of Fingers		Show Reset	ALP ReATI Occurred	ALP ATI Error	ReATI Occurred	ATI Error	Charging Mode		

- Bit 15: Unused
- Bit 14: **ALP Output**- Prox/Touch detection status of ALP channel
  - 0: No output detected
  - 1: Output detected
- Bit 13: Unused
- Bit 12: **Too Many Fingers**- Indicates more than allowed fingers detected
  - 0: Number of fingers within maximum selected value
  - 1: Number of fingers exceeds maximum selected value
- Bit 11: Unused
- Bit 10: **TP Movement**- Trackpad finger movement detected
  - 0: No touches, or all touches stationary (see Section 7.5)
  - 1: Movement of finger(s) detected on trackpad
- Bit 9-8: **No of Fingers**- Number of fingers detected on trackpad
  - 00: No fingers on trackpad
  - 01: 1 finger active
  - 10: 2 fingers active
- Bit 7: **Show Reset**- Indicates a reset
  - 0: Reset indication has been cleared by host, writing to *Ack Reset*
  - 1: Reset has occurred and indication has not been cleared by host
- Bit 6: **ALP Re-ATI Occurred**- Alternate Low Power channel Re-ATI Status
  - 0: No re-ATI
  - 1: Re-ATI has just completed on alternate LP channel
- Bit 5: **ALP ATI Error**- Alternate Low Power ATI error status
  - 0: Most recent ATI process was successful
  - 1: Most recent ATI process was unsuccessful
- Bit 4: **Re-ATI Occurred**- Trackpad re-ATI status
  - 0: No re-ATI
  - 1: Re-ATI has just completed on the trackpad
- Bit 3: **ATI Error**- Error condition seen on latest trackpad ATI procedure
  - 0: Most recent ATI process was successful
  - 1: Most recent ATI process was unsuccessful
- Bit 2-0: **Charging Mode**: Indicates current mode
  - 000: Active mode
  - 001: Idle-touch mode

Copyright © Azoteq 2026
All Rights Reserved

- 010: Idle mode
- 011: LP1 mode
- 100: LP2 mode

Table A.4: Touch Status <Z> (0x18-0x1A)

Bit15	Bit14	Bit13	Bit12	Bit11	Bit10	Bit9	Bit8	Bit7	Bit6	Bit5	Bit4	Bit3	Bit2	Bit1	Bit0
Touch Status <0>															
CH15	CH14	CH13	CH12	CH11	CH10	CH9	CH8	CH7	CH6	CH5	CH4	CH3	CH2	CH1	CH0
Touch Status <1>															
CH31	CH30	CH29	CH28	CH27	CH26	CH25	CH24	CH23	CH22	CH21	CH20	CH19	CH18	CH17	CH16
Touch Status <2>															
~	~	~	~	~	~	CH41	CH40	CH39	CH38	CH37	CH36	CH35	CH34	CH33	CH32

- Touch Flags for CH0 - CH41
  - 0: No touch detected
  - 1: Touch detected

Table A.5: Trackpad and ALP Multipliers/Divider (0x21 / 0x25)

Bit15	Bit14	Bit13	Bit12	Bit11	Bit10	Bit9	Bit8	Bit7	Bit6	Bit5	Bit4	Bit3	Bit2	Bit1	Bit0
Reserved		Fine Divider					Coarse Multiplier				Coarse Divider				

- Bit 15-14: Unused
- Bit 13-9: **Fine Fractional Divider**
  - 5-bit value between 1 and 31
- Bit 8-5: **Coarse Multiplier**
  - 4 bit value between 1 and 15
- Bit 4-0: **Coarse Fractional Divider**
  - 5 bit value between 1 and 31

Table A.6: System Control (0x33)

Bit15	Bit14	Bit13	Bit12	Bit11	Bit10	Bit9	Bit8	Bit7	Bit6	Bit5	Bit4	Bit3	Bit2	Bit1	Bit0
Tx test	Reserved			Sus-pend	Res-erved	SW Reset	Res-erved	Ack Reset	ALP ReATI	TP ReATI	ALP Re-seed	TP Re-seed	Mode Select		

- Bit 15: **Tx test**- Tx short test
  - 0: Normal operation
  - 1: Enable Tx short test configuration
- Bit 14-12: Unused
- Bit 11: **Suspend**- Suspend IQS7211E
  - 0: No action
  - 1: Place IQS7211E into suspend after the communication window terminates
- Bit 10: Unused
- Bit 9: **SW Reset**- Reset the device
  - 0: No action
  - 1: Reset device after communication window terminates
- Bit 8: Unused
- Bit 7: **Ack Reset**- Acknowledge a reset
  - 0: No action
  - 1: Acknowledge the reset by clearing *Show Reset* flag
- Bit 6: **ALP Re-ATI**- Queue a re-ATI on ALP channel
  - 0: No action
  - 1: Perform re-ATI when ALP channel is sensed again

Copyright © Azoteq 2026
All Rights Reserved

- Bit 5: **TP Re-ATI**- Queue a re-ATI on trackpad channels
  - 0: No action
  - 1: Perform re-ATI when trackpad channels are sensed again
- Bit 4: **ALP Reseed**- Reseed alternate low power channel
  - 0: No action
  - 1: Reseed the LTA of the alternate LP channel
- Bit 3: **TP Reseed**- Reseed trackpad channels
  - 0: No action
  - 1: Reseed reference values of trackpad
- Bit 2-0: **Mode Select**- Select mode (only applicable in *Manual Mode*)
  - 000: Active mode
  - 001: Idle-Touch mode
  - 010: Idle mode
  - 011: LP1 mode
  - 100: LP2 mode

Table A.7: Config Settings (0x34)

Bit15	Bit14	Bit13	Bit12	Bit11	Bit10	Bit9	Bit8	Bit7	Bit6	Bit5	Bit4	Bit3	Bit2	Bit1	Bit0
Res-erved	TP Touch Event	ALP Event	Res-erved	ReATI Event	TP Event	Gesture Event	Event Mode	Manual Con-trol	Comms End Cmd	WDT	Comms Re-quest EN	ALP ReATI EN	TP ReATI EN	Res-erved	Res-erved

- Bit 15: Unused
- Bit 14: **TP Touch Event**- Enable trackpad touch triggering event
  - 0: Toggle of trackpad touch status does not trigger an event
  - 1: Toggle of trackpad touch status triggers an event
- Bit 13: **ALP Event**- Enable alternate LP channel detection triggering event
  - 0: Toggle of alternate channel prox/touch status does not trigger an event
  - 1: Toggle of alternate channel prox/touch status triggers an event
- Bit 12: Unused
- Bit 11: **Re-ATI Event**- Enable Re-ATI generating an event
  - 0: Re-ATI occurring does not trigger an event
  - 1: Re-ATI occurring triggers an event
- Bit 10: **TP Event**- Enable trackpad events
  - 0: Trackpad finger movement or finger up/down will not trigger event
  - 1: Trackpad finger movement or finger up/down will trigger event
- Bit 9: **Gesture Event**- Enable gesture events
  - 0: Gestures will not trigger event
  - 1: Gestures will trigger event
- Bit 8: **Event Mode**- Enable event mode communication
  - 0: I^2C is presented each cycle (except auto-prox cycles)
  - 1: I^2C is only initiated when an enabled event occurs
- Bit 7: **Manual Control**- Override automatic mode switching
  - 0: Modes are automatically controlled by firmware
  - 1: Manual control of modes are handled by host
- Bit 6: **Comms End Cmd**- Alternative method to terminate comms (see Section 11.7)
  - 0: I^2C stop ends comms
  - 1: Write one or two bytes (any data) to the address 0xFF followed by a STOP to end comms
- Bit 5: **WDT**- Watchdog timer
  - 0: Watchdog is disabled

Copyright © Azoteq 2026
All Rights Reserved

- 1: Watchdog is enabled
- Bit 4: **Comms Request EN**- Alternative polling method (while RDY not LOW)
  - 0: Forcing comms will clock stretch until a comms window
  - 1: A comms window must be requested with a command (no stretching)
- Bit 3: **ALP Re-ATI EN**- Automatic Re-ATI on alternate LP channel
  - 0: Re-ATI is disabled for alternate LP channel
  - 1: Re-ATI is enabled for alternate LP channel
- Bit 2: **TP Re-ATI EN**- Automatic Re-ATI on trackpad
  - 0: Re-ATI is disabled for trackpad channels
  - 1: Re-ATI is enabled for trackpad channels
- Bit 1-0: Unused

Table A.8: Other Settings (0x35)

Bit15	Bit14	Bit13	Bit12	Bit11	Bit10	Bit9	Bit8	Bit7	Bit6	Bit5	Bit4	Bit3	Bit2	Bit1	Bit0
Reserved											14MHz / 18MHz	Main Osc Adj			

- Bit 15-5: Unused
- Bit 4: **14MHz/18MHz**- Main oscillator selection
  - 0: Main oscillator is 14MHz
  - 1: Main oscillator is 18MHz
- Bit 3-0: **Main Osc Adj**- Small main oscillator adjustment setting
  - 4-bit value
  - 0-15: 0 = No adjustment .. 15 = Maximum adjustment

Table A.9: ALP Setup (0x36)

Bit15	Bit14	Bit13	Bit12	Bit11	Bit10	Bit9	Bit8	Bit7	Bit6	Bit5	Bit4	Bit3	Bit2	Bit1	Bit0
Reserved						ALP Count Filter	ALP Sens-ing Method	Rx7_ EN	Rx6_ EN	Rx5_ EN	Rx4_ EN	Rx3_ EN	Rx2_ EN	Rx1_ EN	Rx0_ EN

- Bit 15-10: Unused
- Bit 9: **Count Filter**- ALP count filter
  - 0: ALP channel count is unfiltered
  - 1: ALP count filter enabled
- Bit 8: **Sensing Method**- ALP sensing method
  - 0: ALP is setup for self-capacitive sensing
  - 1: ALP is setup for mutual-capacitive sensing
- Bit 7-0: **RX_EN**- ALP Rx electrodes
  - 0: Rx disabled (not used for ALP)
  - 1: Rx enabled (forms part of ALP sensor)

Table A.10: ALP Tx Enable (0x37)

Bit15	Bit14	Bit13	Bit12	Bit11	Bit10	Bit9	Bit8	Bit7	Bit6	Bit5	Bit4	Bit3	Bit2	Bit1	Bit0
Reserved			Tx12_ EN	Tx11_ EN	Tx10_ EN	Tx9_ EN	Tx8_ EN	Tx7_ EN	Tx6_ EN	Tx5_ EN	Tx4_ EN	Tx3_ EN	Tx2_ EN	Tx1_ EN	Tx0_ EN

- Bit 15-13: Unused
- Bit 12-0: **TX_EN**- ALP Tx electrodes
  - 0: Tx disabled (not used for ALP)
  - 1: Tx enabled (forms part of ALP sensor)

Copyright © Azoteq 2026
All Rights Reserved

Table A.11: Conversion Frequency (0x3D / 0x3E)

Bit15	Bit14	Bit13	Bit12	Bit11	Bit10	Bit9	Bit8	Bit7	Bit6	Bit5	Bit4	Bit3	Bit2	Bit1	Bit0
Conversion Frequency Fraction								Conversion Frequency Period							

- Bit 15-8: **Frequency Fraction**
  - Range: 0 - 127
- Bit 7-0: **Conversion Period**
  - Range: 0 - 127
- **Note:** The default settings use a *Frequency Fraction* of 26 and a *Conversion Period* of 2. This results in a conversion frequency of 1.42 MHz when the main oscillator is set to 14 MHz, and 1.83 MHz when set to 18 MHz. Refer to Section 9.2 for appropriate settings and recommended values.

Table A.12: Trackpad and ALP Hardware Settings (0x3F / 0x40)

Bit15	Bit14	Bit13	Bit12	Bit11	Bit10	Bit9	Bit8	Bit7	Bit6	Bit5	Bit4	Bit3	Bit2	Bit1	Bit0
NM In Static	CS_0v5 Discharge	RF Filter	CS Cap Select	Opamp Bias		Max Count		LP2 Auto-Prox Cycles (only in ALP register)			LP1 Auto-Prox Cycles (only in ALP register)			Init Delay	

- Bit 15: **NM In Static**- NM In Static
  - 0: Disabled (recommended)
  - 1: Enabled
- Bit 14: **CS 0v5 Discharge**- Select internal Cs discharge voltage
  - 0: Discharge to 0V (recommended for most cases)
  - 1: Discharge to 0.5V
- Bit 13: **RF Filter**- Internal RF filters
  - 0: RF filters disabled
  - 1: RF filters enabled
- Bit 12: **CS Cap Select**- Internal pool capacitor size
  - 0: Internal capacitor is 40pF
  - 1: Internal capacitor is 80pF (recommended)
- Bit 11-10: **Opamp Bias**- Mutual opamp bias
  - 00: 2μA
  - 01: 5μA
  - 10: 7μA
  - 11: 10μA
- Bit 9-8: **Max Count**- Count upper limit (count value stops conversion after reaching this)
  - 00: 1023
  - 01: 2047
  - 10: 4095
  - 11: 16384
- Bit 7-5: **LP2 Auto-Prox Cycles**- Number of LP2 auto-prox cycles
  - 000: 4
  - 001: 8
  - 010: 16
  - 011: 32
  - 1xx: Auto-prox disabled
- Bit 4-2: **LP1 Auto-Prox Cycles**- Number of LP1 auto-prox cycles
  - 000: 4
  - 001: 8
  - 010: 16
  - 011: 32

Copyright © Azoteq 2026
All Rights Reserved

- 1xx: Auto-prox disabled

- Bit 1-0: **Init Delay**- Initial cycles delay
  - 00: 4
  - 01: 16
  - 10: 32
  - 11: 64

Table A.13: Trackpad Settings (0x41)

Bit15	Bit14	Bit13	Bit12	Bit11	Bit10	Bit9	Bit8	Bit7	Bit6	Bit5	Bit4	Bit3	Bit2	Bit1	Bit0
Total Rxs								Reserved		MAV Filter	IIR Static	IIR Filter	Switch XY Axis	Flip Y	Flip X

- Bit 15-8: **Total Rxs**- used for trackpad
- Bit 7-6: Unused
- Bit 5: **MAV Filter**- Moving averaging filter
  - 0: XY MAV filter on touch position disabled
  - 1: XY MAV filter on touch position enabled (recommended)
- Bit 4: **IIR Static**- IIR filtering method for the XY data points
  - 0: Damping factor for IIR filter is dynamically adjusted relative to XY movement (recommended)
  - 1: Damping factor for IIR filter is fixed
- Bit 3: **IIR Filter**- IIR filter
  - 0: XY IIR filter disabled
  - 1: XY IIR filter enabled (recommended)
- Bit 2: **Switch XY Axis**- Switch X and Y axes
  - 0: Rxs are arranged in trackpad columns (X), and Txs in rows (Y)
  - 1: Txs are arranged in trackpad columns (X), and Rxs in rows (Y)
- Bit 1: **Flip Y**- Flip Y output values
  - 0: Keep default Y values
  - 1: Invert Y output values
- Bit 0: **Flip X**- Flip X output values
  - 0: Keep default X values
  - 1: Invert X output values

Table A.14: Gesture Enable (0x4B)

Bit15	Bit14	Bit13	Bit12	Bit11	Bit10	Bit9	Bit8	Bit7	Bit6	Bit5	Bit4	Bit3	Bit2	Bit1	Bit0
Swipe and Hold Y-	Swipe and Hold Y+	Swipe and Hold X-	Swipe and Hold X+	Swipe Y-	Swipe Y+	Swipe X-	Swipe X+	Reserved			Palm Gesture	Press-and-Hold	Triple Tap	Double Tap	Single Tap

- Bit 15: **Swipe and Hold Y-** - Swipe and hold in negative Y direction
  - 0: Gesture disabled
  - 1: Gesture enabled
- Bit 14: **Swipe and Hold Y+** - Swipe and hold in positive Y direction
  - 0: Gesture disabled
  - 1: Gesture enabled
- Bit 13: **Swipe and Hold X-** - Swipe and hold in negative X direction
  - 0: Gesture disabled
  - 1: Gesture enabled
- Bit 12: **Swipe and Hold X+** - Swipe and hold in positive X direction
  - 0: Gesture disabled

Copyright © Azoteq 2026
All Rights Reserved

- 1: Gesture enabled
- Bit 11: **Swipe Y-** - Swipe in negative Y direction
  - 0: Gesture disabled
  - 1: Gesture enabled
- Bit 10: **Swipe Y+** - Swipe in positive Y direction
  - 0: Gesture disabled
  - 1: Gesture enabled
- Bit 9: **Swipe X-** - Swipe in negative X direction
  - 0: Gesture disabled
  - 1: Gesture enabled
- Bit 8: **Swipe X+** - Swipe in positive X direction
  - 0: Gesture disabled
  - 1: Gesture enabled
- Bit 7-5: Unused
- Bit 4: **Palm Gesture**- Palm gesture
  - 0: Gesture disabled
  - 1: Gesture enabled
- Bit 3: **Press-and-Hold**- Press-and-hold gesture
  - 0: Gesture disabled
  - 1: Gesture enabled
- Bit 2: **Triple Tap**- Triple tap gesture
  - 0: Gesture disabled
  - 1: Gesture enabled
- Bit 1: **Double Tap**- Double tap gesture
  - 0: Gesture disabled
  - 1: Gesture enabled
- Bit 0: **Single Tap**- Single tap gesture
  - 0: Gesture disabled
  - 1: Gesture enabled

Copyright © Azoteq 2026
All Rights Reserved

B Revision History

Release	Date	Changes
v1.0	March 2022	Initial document released
v1.1	June 2024	Minor formatting and grammar changes IQS7211E FW updated from v1.0 to v1.1 (Table A.1) Added order code 002 and added QF package type (Section 14) Changes implemented for IQS7211E-002 IC option according to "PIN-230172" Updated current consumption (Section 3.4) Update to package outline description of QFN20 (QFR & QNR) (Section 15) Update to package outline description of WLCSP18 Added recommended footprints for all IC packages
v1.2	June 2024	Minor updates to ordering code descriptions
v1.3	August 2024	Updated submodules and added tolerance to QFR package
v1.4	March 2025	Updated order codes section
v1.5	June 2026	Changed recommended NM In Static setting to 0. (Table A.12) Revised Charge Transfer Frequency section (Section 9.2 and Table A.11) Added known force comms clock stretching issue (Section 11.9.3) Added invalid comms return section (Section 11.10) Minor product information updates across multiple sections Minor update to block diagram Removed 100 nF capacitor on MCLR/RDY pin in reference schematic (Figure 2.1) Minor update to MCLR pin diagram Updated reference link style Corrected Digital IO Electrical Specifications Updated tape and reel dimensions
v1.6	October 2026	Updated Alternate Low-Power Channel information (Section 5.2) Updated order codes section

Copyright © Azoteq 2026
All Rights Reserved

Contact Information

	South Africa (Headquarters)	China
Physical Address	1 Bergsig Avenue Paarl 7646 South Africa	Room 501A, Block A T-Share International Centre Taoyuan Road, Nanshan District Shenzhen, Guangdong, PRC
Tel	+27 21 863 0033	+86 755 8303 5294 ext 808
Email	info@azoteq.com	info@azoteq.com

	USA	Taiwan
Physical Address	7000 North Mopac Expressway Suite 200 Austin TX 78731 USA	Xintai 5th Road, Sec. 1 No. 99, 9F-12C Xizhi District 221416 New Taipei City Taiwan
Tel	+1 512 538 1995	+886 976 296 768
Email	info@azoteq.com	info@azoteq.com

Visit www.azoteq.com
for a list of distributors and worldwide representation.

Patents as listed on www.azoteq.com/patents-trademarks/ may relate to the device or usage of the device.

Azoteq®, Crystal Driver®, IQ Switch®, ProxSense®, ProxFusion®, LightSense™, SwipeSwitch™, Dycal™, TriggerMax™, WearMax™, and the logo are trademarks of Azoteq.

The information in this Datasheet is believed to be accurate at the time of publication. Azoteq uses reasonable effort to maintain the information up-to-date and accurate, but does not warrant the accuracy, completeness or reliability of the information contained herein. All content and information are provided on an “as is” basis only, without any representations or warranties, express or implied, of any kind, including representations about the suitability of these products or information for any purpose. Azoteq disclaims all warranties and conditions with regard to these products and information, including but not limited to all implied warranties and conditions of merchantability, fitness for a particular purpose, title and non-infringement of any third party intellectual property rights. Azoteq assumes no liability for any damages or injury arising from any use of the information or the product or caused by, without limitation, failure of performance, error, omission, interruption, defect, delay in operation or transmission, even if Azoteq has been advised of the possibility of such damages. The applications mentioned herein are used solely for the purpose of illustration and Azoteq makes no warranty or representation that such applications will be suitable without further modification, nor recommends the use of its products for application that may present a risk to human life due to malfunction or otherwise. Azoteq products are not authorized for use as critical components in life support devices or systems. No licenses to patents are granted, implicitly, express or implied, by estoppel or otherwise, under any intellectual property rights. In the event that any of the abovementioned limitations or exclusions does not apply, it is agreed that Azoteq’s total liability for all losses, damages and causes of action (in contract, tort (including without limitation, negligence) or otherwise) will not exceed the amount already paid by the customer for the products. Azoteq reserves the right to alter its products, to make corrections, deletions, modifications, enhancements, improvements and other changes to the content and information, its products, programs and services at any time or to move or discontinue any contents, products, programs or services without prior notification. For the most up-to-date information and binding Terms and Conditions please refer to www.azoteq.com.